Atwood Mobile Products
4750 Hiawatha Drive • Rockford, IL 61103-1298
PHONE: 815•877•5700 **FAX:** 815•877•7469
INTERNET: http://www.atwoodmobile.com

September 2003

INTRODUCTION

The 2004 edition of the Atwood Water Heater Service Manual is a resource created to help service technicians identify Atwood product by serial number, diagnose service problems and efficiently and effectively process warranty claims.

In 2003, Atwood relocated the Switch, Thermostat and ECO that was installed on the back of combination 6 and 10 gallon Gas/Electric Water Heaters. A double switch is now located inside the RV for convenience and a joint ECO and T-Stat is located on the gas side of the water heater. This leaves only the relay and heating element on the backside of the water heater.

Each of the manuals within this series offers a general overview of the product as well as more specific product information. For each product within the manual, you will find model identification, recommended tools and equipment, a sequence of operation, warnings, annual maintenance procedures, parts and troubleshooting guides, warranty procedures, flat rate schedules, and replacement part reference charts.

Due to the rapidly changing personal computer revolution we have placed troubleshooting information in a variety of places to make sure that the most accurate information is available. The best place to find the current information about Atwood products is our website: www.atwoodmobile.com. At our website brochures may be downloaded, trouble shooting guides reviewed and the latest information bulletins can be read. In addition all Atwood Authorized Service Centers are listed on our site, accessible via an easy-to-use search system.

Service for all Atwood products is handled out of our Rockford location. Should you have any questions regarding our products or the information contained in this manual simply dial 1-800-825-4328. **Be sure to have the Model and Serial Number when you call.**

Atwood Service Department

Disclaimer: The data presented in this publication is obtained from the most reliable sources, and is believed to be accurate as of the date of publication. Responsibility for typographical errors or omission of data cannot be assumed by the publishers.

NOTES

THIS PAGE INTENTIONALLY LEFT BLANK

TABLE OF CONTENTS

Atwood Water Heaters

Atwood Letter 1
Aftermarket Model Identification 4
Pilot Models
Questions 5
Model Number Explanation / Features 6
Recommended Tools & Equipment 7
Gas Thermostat Controls & Pilot Assemblies 8
Pilot Sequence of Operation 9
Pilot & Main Burner 10
Trouble Shooting Guide 11
Engine Heat Exchange System / Aftermarket Heating Elements 12
Bolt-In Heating Element, Thermostat & ECO / 110 VAC Trouble Shooting Wiring Schematic 13
Screw-In Heating Element, Thermostat & ECO / 110 VAC Trouble Shooting Wiring Schematic 14
Electronic Ignition Models
Questions 15
Model Number Explanation / Features 16
Recommended Tools & Equipment 17
DSI Sequence of Operation 18
Trouble Shooting Guide - Electronic Ignition 19-20
Information Guide - Intermittent Ignition 21-22
Potted Channel Circuit Boards / Thermal Cut Off Device / Thermostat 23
Wiring Schematics 24
General Water Heater Information
Questions 25
Pressure Temperature Relief Valve / Water Heater Tank Corrosion / Atwood Clad Tank 26
Flushing Tank / Winterizing Instructions 27
Water Heater Terminology 28
Warranty 29
Warranty Procedures 29
Return Goods Policy (RETURN ADDRESS) 30
Flat Rate Schedule 31
Pilot Water Heater Parts Breakdown 32-34
Replacement Part Reference
G10B, G10C / G610-3B, GH610-3 / G4SM / G6A-2, G6A-3, G6A-6, G6A-6P, G6A-7, G6A-7P / GC6A, GC6A-3, GC6A-6, GC6A-7 / GH6-3, GH6-6, GH6-7 / GC6AA-7, GC6AA-7P / GC6AA-8, GC6AA-8P / G610-3, GC10-1, GC10-2, GC10-2P / GC10A-2 / GC10A-2P / G10-1, G10-1P, G10-2, G10-2P
Electronic Ignition Water Heater Parts Breakdown 35-37
Replacement Part Reference
G610-3E, GH610-3E / GCH6-4E, GCH6-6E, / GC6A-7E / GC6AA-7E / GC6AA-8E / GC6AA-9E, GC6AA-10E G6A-2E, G6A-3E, G6A-4E, G6A-6E, G6A-7E, G6A-8E / G6A-3E, GH6-3E / GH6-4E, GH6-6E, GH6-7E, GH6-8E / GCH6A-7E, GCH6A-8E, GCH6A-9E / GCH6A-10E / GCH10A-2E, GCH10A-3E / GCH10-4E / G10-1E / GH10-2E, GH10-3E / GC10-1E, GC10-2E / GC10A-2E / GC10A-3E / GC10A-4E
Service Tank Kit Part Numbers 38
Marine Water Heater Parts Breakdown 39

Atwood Training Tapes and Manuals ORDER BLANK

Aftermarket Gas Water Heaters

Includes Doors & Switches (when appropriate)

G6A-7	6 gal.	w/pilot
GC6AA-8	6 gal.	combo w/pilot
GC6AA-10E	6 gal.	electronic gas combo
GCH6A-10E	6 gal.	electronic gas combo w/heat exchange
G6A-8E	6 gal.	electronic
GH6-7	6 gal.	w/pilot, heat exchange
GH6-8E	6 gal.	electronic w/heat exchange
G10-2	10 gal.	w/pilot
GC10A-2	10 gal.	combo
G10-3E	10 gal.	electronic
GC10A-4E	10 gal.	electronic combo
GCH10A-4E	10 gal.	electronic combo w/heat exchange

Marine Water Heaters

EHM6-4WFHX	4 gal.	marine, front heat exchange & special hook-up
EHM6-SMFHX	6 gal.	electric marine w/heat exchange
H6-FHX	6 gal.	marine special
EHM6-ATC	6 gal.	marine, heat exchange & temp. control
EHM6-SMSS	6 gal.	marine, rear heat exchange & special hook-up
EHM11-SSDHXT	6 gal.	marine, stainless steel dual heat exchange tube
EHM11-SMFHX	11 gal.	electric marine w/heat exchange
EHM11-SST	11 gal.	electric, heat exchange stainless steel tank
H11-FHX	11 gal.	marine special
EHPM10	11 gal.	electric marine w/special tube
EH-20	20 gal.	electric marine w/heat exchange
E20	20 gal.	electric marine

Marine International Water Heaters

EHM6-220-FHX	6 gal.	marine, heat exchange, 220 volts
EHM6-220SST	6 gal.	marine, heat exchange, 220 volts, stainless steel housing
EHM6-220-FHX	6 gal.	marine, heat exchange, 220 volt, 1000 watt element
EHM11-220	11 gal.	marine, heat exchange, 220 volts
EHM11-220SST	11 gal.	marine, heat exchange, 220 volts, stainless steel housing
EHM11-220SS-4WFHX	11 gal.	marine, heat exchange, w/special hook-up
EHM11-220SS-IMFHX	11 gal.	marine, heat exchange, 220 volt, 1000 watt element
EH20-220	20 gal.	marine, heat exchange, 220 volts
E20-220	20 gal.	marine, 220 volts

European Water Heaters

EURI6A-6E	6 gal.	International Electronic 3-bar valve
EURIH6-6E	6 gal.	International Electronic w/heat exchange
EURICH6-6E	6 gal.	International Electronic Combo w/heat exchange

PILOT MODELS

QUESTIONS

The following questions should be answered during this portion of the manual:

- Are the Robertshaw and White Rodgers thermostat gas control valves inter-changeable?
- What is the minimum gas pressure required for proper water heater operation?
- Where on the water heater gas control can gas pressure be tested?
- Can the pilot flame be adjusted?
- What is minimum millivolt output of the thermocouple required for proper gas control operation?
- How can you test a thermocouple?
- How tight should the thermocouple connection be at the gas control?
- What is an E.C.O., where is it located and what is its function?
- What is a proper main burner air shutter adjustment?
- What is the proper control and main burner alignment?
- How can you easily check the calibration of a control?

Atwood 6 and 10 gallon Pilot Water Heaters

Atwood water heaters are designed and approved for use only in recreation vehicles (travel trailers, 5th wheels, motor homes, etc.). They are offered in two sizes: 6 and 10 gallon capacities.

TYPE OF GAS IGNITION -
This unit is ignited outside of the trailer by a match, piezo ignitor or other ignition device. The water temperature is adjustable at the thermostat control.

EXPLANATION OF MODEL NUMBER:

Pilot Models

G C H 6 AA - 7 P

- P → Pilot Relight
- 7 → Version
- AA → Type of heating element
  (GC_ A - _ = bolt on, GC_ A A-_ = screw in)
- 6 → Gallon capacity (6 or 10)
- H → Engine Heat Exchange
- C → Combination gas and 110 VAC electric
- G → Propane Gas

NOTE: When replacing the element on a combination gas/110 VAC unit, always check the back of the heater for the type of element it has. It will either be a bolt-on or screw-in element. They are no interchangeable.

FEATURES

- All units operate on propane gas.
- A heat exchange option is available for motor homes. The water heater tank must have factory equipped heat exchange tubes welded on it already. They cannot be added later. A new water heater tank with this option is the only way to obtain this feature.
- Skin mounting allows the water heater to be hooked up with plumbing and electrical before the sidewall is erected.
- The tank has a clad aluminum lining that protects against corrosion and does not need to be replaced on a yearly or more frequent basis like anode rods do. A more detailed explanation of cladding is found in the back of this manual.
- 95% of all servicing can be done on the outside of the water heater. 110 VAC heating components are the exception since they are located on the back of the water heater inside the trailer.
- A flush flange is available for all models. This makes the access door flush with the trailer sidewall.
- There are multiple protection features in the form of a pressure-temperature relief valve, a limit switch in the gas thermostat and an externally sealed combustion chamber.
- On combination water heaters, the gas mode and the 110 VAC heating mode can be operated at the same time since each mode has its own thermostat.
- Both the six and ten gallon units have the lightest weight in the industry.
- On all trailers purchased after June 1, 1997 Atwood Limited Warranty is for a period of two years. This includes all reasonable labor charges.
- We have 650+ Service Centers throughout the United States.

Recommended Tools and Equipment

U-Tube Manometer - This is the most accurate device for measuring gas pressure. If you use a dial-type manometer, it should be calibrated periodically with this type of manometer.

Thermostat Wrench - This tool allows for easier and safer removal of the gas thermostat control. An adjustable version for different size controls is available through most RV distributors or you may fabricate one from angle iron. We do not recommend using a pipe wrench because it may damage the control causing it to go out of calibration.

U-TUBE MANOMETER
with 1/8” pipe nipple

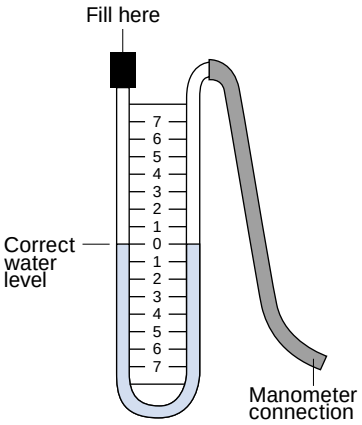

THERMOSTAT WRENCH

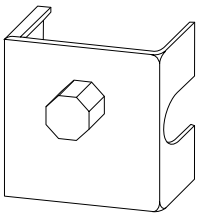

Multi-meter - This is the most versatile meter and will test AC voltage and continuity. A continuity test can be used to test for a blown E.C.O. on a gas control.

Magnet Assembly Thermocouple Tester - This assembly can be obtained at an electronics or hardware store. This same assembly can also be removed from a Robertshaw control. It will verify if a thermocouple is good. For testing, screw a thermocouple into the tester, heat the thermocouple for 25 seconds and then press the plunger down. If the plunger pops up in less that 25 seconds, the thermocouple is faulty.

MULTI-METER TO TEST AC VOLTAGE AND CONTINUITY

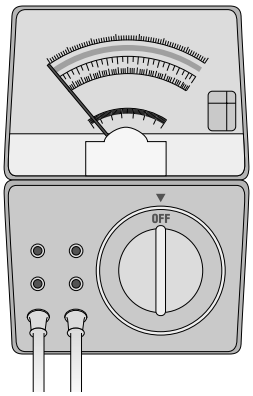

MAGNET ASSEMBLY TO TEST THERMOCOUPLE

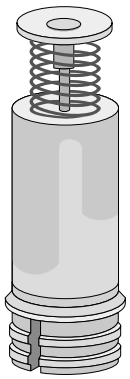

Common Hand Tools - 1/8″ and 1/4″ nut drivers, open end wrenches, flat blade and Phillips screw drivers.

Leak Test Solution - A solution that bubbles when applied to gas fittings or connections showing when a gas leak is present.

Gas Thermostat Controls and Pilot Assemblies

Only two makes of gas controls have been used on our pilot model water heaters. They are the Robertshaw "Unitrol" and White Rodger (formerly Jade or ITT).

The Robertshaw control came in two different sizes of gas inlets: 3/8″ inverted flare and 3/8″ N.P.T. The inverted inlet control is no longer available. Therefore, the water heater gas line connection will have to be modified to 3/8″ N.P.T. in order to use the current Robertshaw control.

The White Rodger control is the valve we are using on all production today. Formerly it had a 3/8″ N.P.T. inlet. Now it is only available with a 1/4″ inlet. This improvement eliminates the adapter fitting into the control allowing the use of only a single 45 degree elbow (3/8″ flare x 1/4″ N.P.T.). If you are replacing a current 1/4″ inlet model control with a earlier model 3/8″ inlet control you may have in stock, the adapter fitting that mates the control and elbow fitting is still available.

Although the controls appear quite different in size, the White Rodger and Robertshaw control are interchangeable. Their manifolds will both line up with the burner tube properly.

Both controls have a port to test gas pressure through the valve. This can be accomplished by removing the cover screw and inserting a 1/8" pipe nipple. After attaching your manometer hose to this fitting, the manometer should register 10" W.C. through the valve while it is operating.

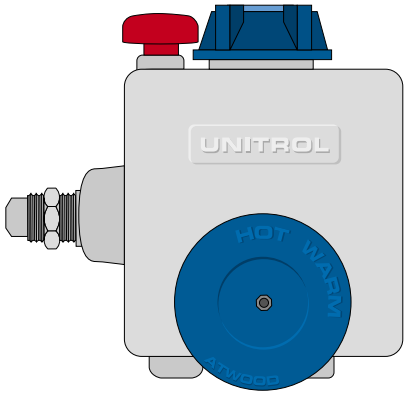

ROBERTSHAW "UNITROL"

- 3/8″ Inverted inlet
  3/8″ N.P.T. outlet
  (no longer available)
- 3/8″ N.P.T. inlet
  3/8″ N.P.T. outlet

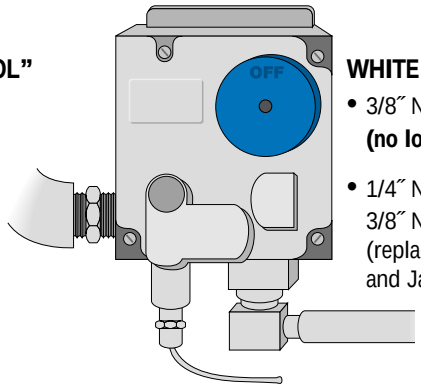

WHITE RODGERS (JADE, ITT)

- 3/8″ N.P.T. outlet
  (no longer available)
- 1/4″ N.P.T. inlet
  3/8″ N.P.T. outlet
  (replaces all Robertshaw and Jade controls)

There are two main pilot assemblies that you will encounter in the field.

The first is an earlier model Robertshaw pilot assembly with a 1/4″ pilot gas line that mounted on the left side of the main burner.

The current pilot is the Jade assembly with a 1/8″ pilot gas line and it mounts on the right side of the main burner.

The Robertshaw pilot is no longer available and the Jade pilot must be substituted. When installing a Jade assembly in place of a Robertshaw assembly, if there is not a location on the right side of the main burner to mount the Jade pilot, a new burner that has the proper mounting holes will have to be purchased.

Note: The size of the gas line does not have any affect on the size of the pilot flame. Only the gas pressure and pilot orifice regulate the height of the pilot flame.

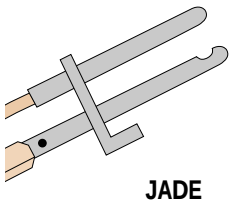

JADE

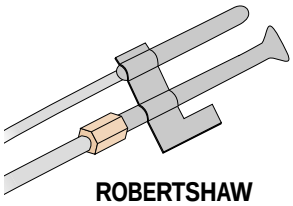

ROBERTSHAW
(obsolete, replace with Jade)

Pilot Sequence of Operation

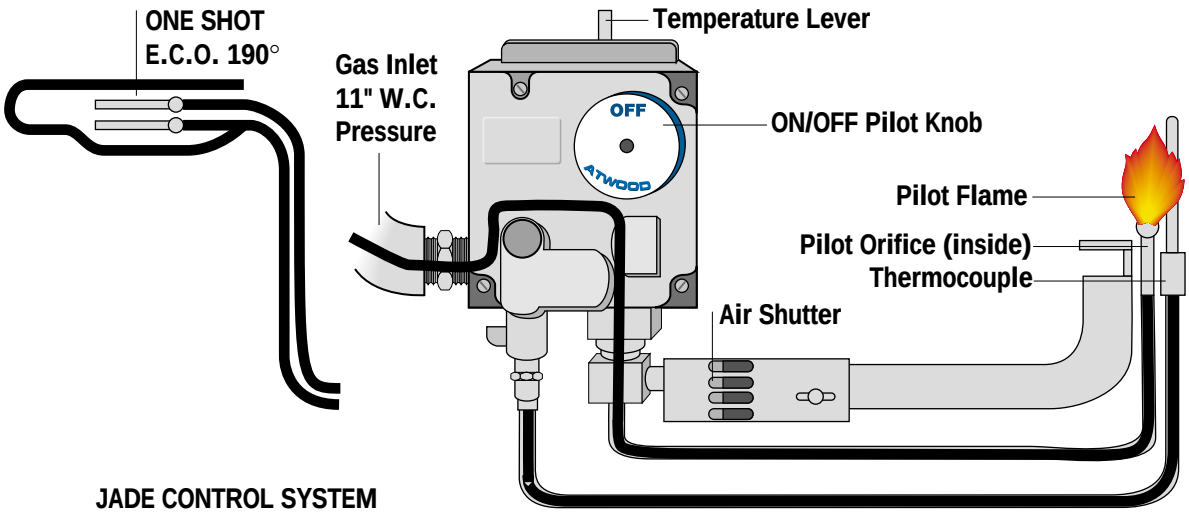

PILOT OPERATION

- **Gas Pressure** — 11˝ W.C. to control is necessary. Set with two gas appliances running.

↓

- **Gas Control** — supplies gas to pilot orifice when control ON/OFF pilot knob is held at pilot position.

↓

- **Pilot Orifice** — meters gas to heat thermocouple. Flame should be high enough to engulf the thermocouple.

↓

- **Thermocouple** — generates millivoltage to the gas control's magnet assembly.

↓

- **Magnet** — when it receives 12 millivolts or more it allows gas to flow freely to pilot without holding pilot knob.

↓

- **E.C.O.** — passes millivolts through the gas control and back to thermocouple. Trips permanently open if water temperature exceeds 190°F.

↓

MAIN BURNER OPERATION

- **Gas Control** — supplies gas to main burner when control knob is set to "ON" position and the temperature lever is set to desired temperature after pilot is lit.

↓

- **Main Burner Orifice** — meters gas through burner tube.

↓

- **Main Burner** — pilot ignites gas when it reaches end of this tube. Flame height adjusted by sliding air shutter. Ideal setting is 1/4 way open (.20˝). Flame should be primarily blue with a trace of yellow.

↓

- **Temperature Knob** — setting of knob determines burner cycle and water temperature. Temperature range is 70°F - 140°F.

Pilot and Main Burner

Pilot Adjustment

Only the gas pressure, gas valve and the pilot orifice regulate the height of the pilot flame. Early model gas controls have a pilot adjustment screw, but this screw has very little effect on the pilot. The pilot adjustment has been removed from the current White Rodger control. The flame should be high enough to engulf the thermocouple at all times. A pilot flame any larger could blow the E.C.O. in the gas control. This is typically the result of enlarging the pilot orifice hole with a pin or similar item. For further corrective measures, refer to the trouble-shooting guide.

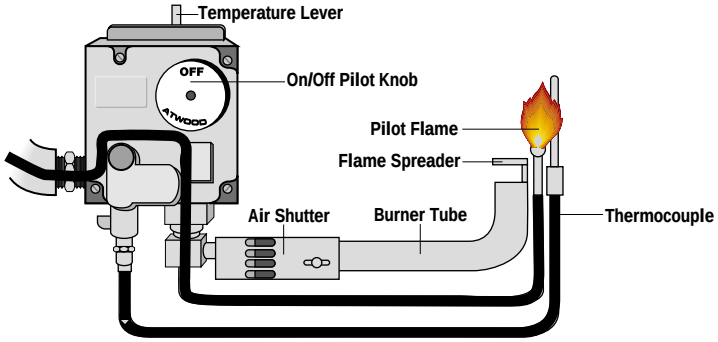

Main Burner Adjustment

The gas pressure, air shutter cleanliness of the burner tube and orifice regulate the main burner flame. The main burner flame should be mainly blue with a trace of yellow and fairly quiet. If it is not, adjust the gas pressure to 11″ W.C., ensure that the main burner air shutter is 1/4 way open and verify that the main burner flame spreader is square to the end of the main burner. For further corrective measures, refer to the trouble-shooting guide.

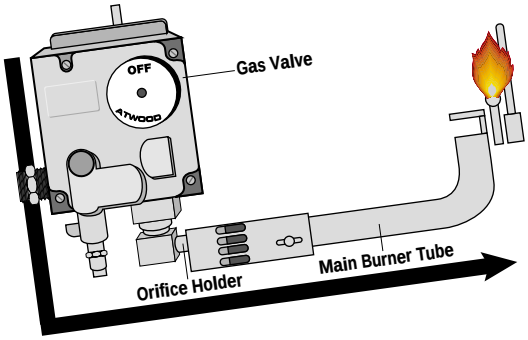

(orientation found in water heater)

Main Burner Alignment

The manifold and main burner should be as perfectly aligned as possible. In other words, the gas valve should be rotated at the same angle as the main burner tube. If it is not, rotate the gas control and/or the orifice holder so that the orifice disperses gas straight down the center of the burner tube. If the valve must be backed off any, check for water leaks at the coupling the control screws into before you operate the water heater.

Atwood
Atwood Mobile Products
4750 Hiawatha Drive • Rockford, IL 61103-1298
PHONE: 815•877•5700 **FAX:** 815•877•7469
INTERNET: http://www.atwoodmobile.com

Pilot Water Heater

TROUBLE SHOOTING GUIDE

Effective: 5/26/98

Guides are only intended for use on Atwood® products by service technicians who have successfully completed Atwood® training. This guide should be used in conjunction with the appropriate Instruction Manual provided with the product and any applicable Industry standards. This is not intended to be a complete list. Please direct questions concerning service of Atwood® products to 800-825-4328 before proceeding.

CAUSE	SOLUTION
PILOT OUTAGE	
Gas pressure incorrect	Set pressure to a minimum of 11˝ W.C. with two or more appliances running
Blocked "U" tube	Remove obstruction
Improper main burner alignment	Re-align main burner and main burner orifice holder and gas valve
Improper air adjustment	Adjust main burner air shutter approximately 1/4 open
Weak thermocouple	Replace thermocouple
Poor pilot flame	Clean or replace pilot orifice
Weak gas control magnet	Replace gas control
Defective E.C.O. in control	Replace gas control and check the pilot flame. It should be high enough to engulf the thermocouple at all times.
PILOT OUTAGE WHEN BUTTON OR KNOB IS RELEASED	
Thermocouple not hot	Hold button or knob for 30 seconds before releasing
Thermocouple loose	Tighten connection at gas control
Weak thermocouple	Replace thermocouple
Weak gas control magnet	Replace gas control
Defective E.C.O. in control	Replace gas control
MAIN BURNER WILL NOT IGNITE	
Blocked main burner orifice	Clean or replace orifice
Main burner flame spreader mis-alignment	Square flame spreader to end of main burner
Blocked main burner	Remove blockage
Improper air adjustment	Adjust main burner air shutter approximately 1/4 open
Blocked "U" tube	Remove blockage
Gas control out of calibration	Replace gas control
ERRATIC MAIN BURNER FLAME	
Improper gas pressure	Set inlet pressure to a minimum of 11˝ W.C. with two or more appliances running
Improper air adjustment	Adjust main burner air shutter approximately 1/4 open
Partial blockage of main burner	Remove blockage
Partial blockage of main burner orifice	Clean or replace orifice
Flame spreader misaligned	Re-align spreader or replace main burner
Blockage in "U" tube	Remove blockage
Poor gas supply	Replace gas supply
Exhaust grille blocked	Remove blockage
Improper main burner alignment	Re-align main burner, main burner orifice holder and gas valve
SMOKING AND SOOTING	
Gas pressure incorrect	Set pressure to a minimum of 11˝ W.C. with two or more appliances running
Poor gas supply	Replace gas supply
Improper pilot flame	Clean or replace pilot orifice
Improper air adjustment	Adjust main burner air shutter approximately 1/4 open
Flame spreader mis-aligned	Re-align or replace main burner
Blocked main burner	Remove blockage
Improper main burner alignment	Re-align main burner, main burner orifice holder and gas valve
Blocked "U" tube	Remove blockage
INSUFFICIENT WATER TEMPERATURE	
Temperature selector out of place	Re-set to desired position
Bypass levers improperly positioned	Reposition levers
Improper air adjustment	Adjust main burner air shutter approximately 1/4 way open
Partial main burner blockage	Remove blockage
Improper main burner adjustment	Re-align main burner and main burner orifice holder
Flame spreader mis-aligned	Re-align or replace main burner
Blocked "U" tube	Remove blockage

Engine Heat Exchange System

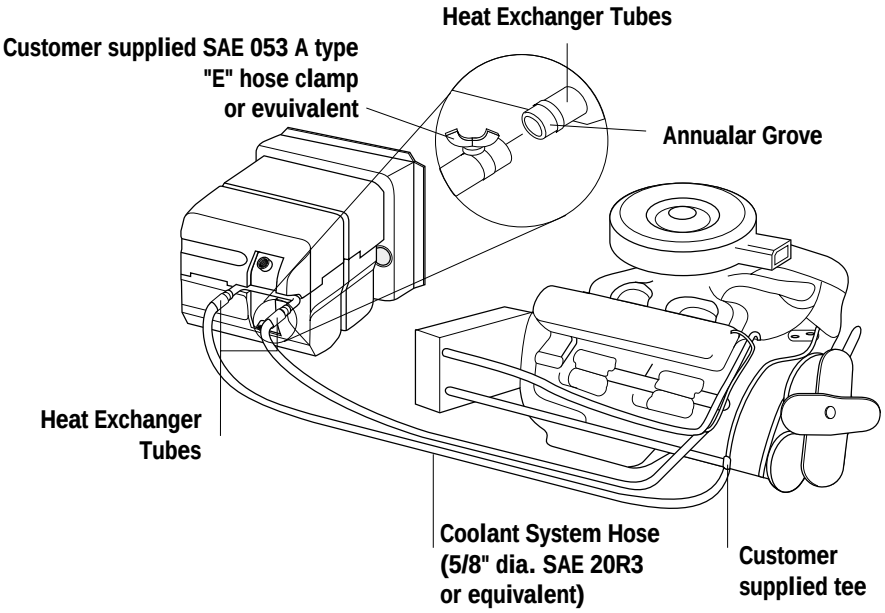

The engine heat exchange system allows a motor home to heat the water while traveling. This convenient option allows you to arrive at your destination with hot water. Operating a pilot or electronic water heater on gas while in transit is a dangerous practice.

This system consists of a U-shaped aluminum tube that is attached to the outside of the tank with welds. SAE hoses are attached to both ends of this tube and are spliced into the engine coolant system.

When the engine is running, the hot coolant flows past the tank through this tube and by means of heat transfer through the welds, heating the water. The design of this system will not allow the water to reach a boiling point. It will typically heat the water to about 130° F. in about 2-3 hours of driving.

Aftermarket Heating Elements

⚠ WARNING
EXPLOSION / BURN INJURY

- Aftermarket heating elements can lack critical safety controls.
- Use of these devices can lead to an out of control heating of water tank and a catastrophic wet side explosion.

YOU DO NOT NEED AN AFTERMARKET HEATING ELEMENT ON AN ATWOOD WATER HEATER. THE USE OF AFTERMARKET HEATING ELEMENT DEVICES MAY ALSO RESULT IN DAMAGE TO COMPONENTS OR WATER HEATER. Atwood's written warranty states - "failure or damage resulting from any alteration to our water heater is the owner's responsibility". **ANY ALTERATION, LIKE THE ADDITION OF AN AFTERMARKET HEATING ELEMENT DEVICE, WILL VOID THE WARRANTY.**

- Temperatures produced by these heating elements can exceed the 190˚F. limit of the ECO on pilot model gas control valves. This gas control valve contains a one-shot ECO. When this ECO blows, the control is completely non-functional and must be replaced. **THIS WILL BE A NON-WARRANTABLE SITUATION.**
- When Aftermarket heating elements are inserted into the drain plug, customers are more prone not to flush their tanks. Not flushing the tank accelerates tank corrosion on both our pilot and electronic ignition water heaters creating a situation where the tank may have to be replaced. **THIS WILL BE A NON-WARRANTABLE SITUATION.**

BOLT-IN
Heating Element, Thermostat & ECO

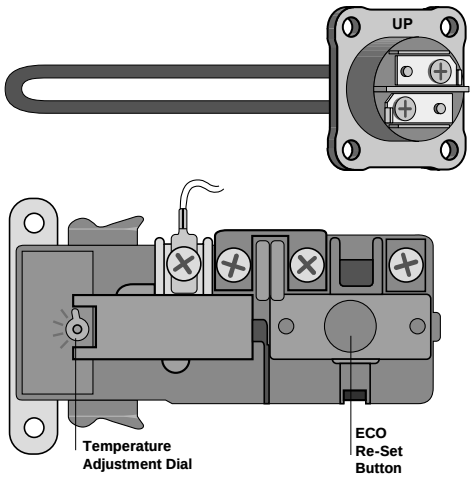

110VAC Trouble-Shooting
Wiring Schematic

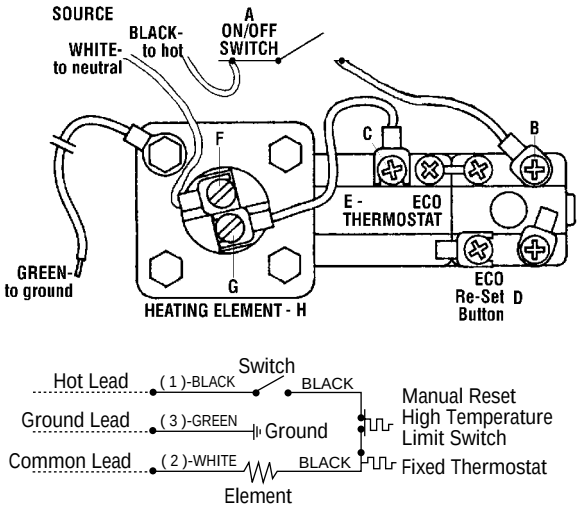

Early model water heaters with 110 VAC heating capacity used a bolt-on heating element and a one piece thermostat/E.C.O..

This 110 VAC system has an adjustable rectangular thermostat that is surface mounted to the inner tank and retained by a steel clip. The temperature settings are HI, MEDIUM, and LOW. If the thermostat is making unobstructed contact with the aluminum tank and it is set to the HI position, it should heat the water to 130° F. It will take longer to heat a tank of water on electric than gas.

The heating element was changed in 1996 from 1500W to 1400W bringing the amperage draw down to 12.7 amps and allowing more cushion for the 15 amp circuit breaker that is normally placed in line. This change adds a few minutes to the heating time.

There are 110 VAC aftermarket conversion kits being offered by distributors in which the heating element is screwed into the tank where the drain plug is located. We do not offer such a kit. Our kit includes the tank with the 110 VAC components already installed in it.

In the case where the 110VAC portion of the water heater is not heating water, the following diagnostic steps and repairs should be investigated:

Turn POWER OFF to the appliance before removing junction box cover.

Perform the following steps with POWER ON to water heater.

1. Verify switch-A is in ON position.
2. Insure there is 110VAC to the unit (measure voltage across the black and white lead to the appliance with POWER ON). If none, trace wiring back and make appropriate wire repair.

Perform the following steps with POWER OFF to water heater.

3. ECO Re-set Button-D should be depressed.
4. Check for continuity between screw-B and screw-C of thermostat. If none, replace thermostat.
5. If water is insufficiently hot, check ECO / Thermostat-E is on high.
6. Verify a good wire connection between thermostat screw-C and heating element screw-G. Correct if necessary.
7. There should be continuity between heating element screw-G and screw-F. If none, element is bad and should be replaced. Do not over-tighten self-tapping screws when installing new element.
8. Check for continuity between element screw-G and flange of element. If there is, element has shorted. Element should be replaced.
9. Verify ground connection.

NOTE: Heating element can be operated on an empty tank for a limited period of time before it self destructs.

SCREW-IN
Heating Element, Thermostat & ECO

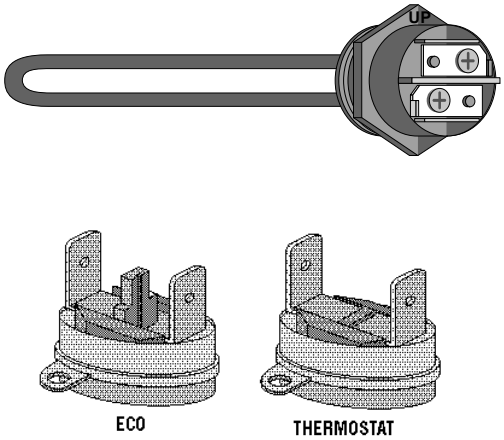

Current production water heaters with the 110 VAC heating option use a screw-in heating element, a separate pre-set thermostat and a separate ECO.

The screw-in heating element is rated at 1400 watts just like the bolt-on element. It is an incalloy element and can be run for a limited amount of time in a dry tank without shorting out.

CAUTION: If the heating element is allowed to run with a dry tank, allow the tank to cool down for 2-3 hours before adding water. Adding water before the tank cools sufficiently could collapse the tank.

The thermostat and ECO are pre-set surface-mounted discs. The thermostat is set at 140° F and is the same thermostat used on the gas side of the electronic ignition water heaters. The ECO is a backup thermostat and will trip if the thermostat fails and the water temperature exceeds 170° F.

110VAC Trouble-Shooting
Wiring Schematic

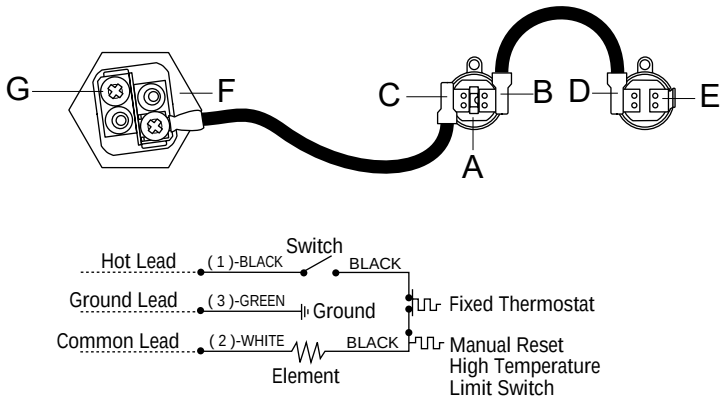

When the 110VAC portion of the water heater is not heating water, the following diagnostic steps and repairs should be investigated:

Turn POWER OFF to the appliance before removing junction box cover.

Perform the following steps with POWER ON to water heater.

1. Verify switch is in ON position.
2. Insure there is 110VAC to the unit (measure voltage across the black and white lead to the appliance with POWER ON). If none, trace wiring back and make appropriate wire repair.

Perform the following steps with POWER OFF to water heater.

3. Manual reset ECO high limit switch-A should be depressed. Check for continuity between TERMINAL B and TERMINAL C of ECO.
4. Check for continuity between TERMINAL D and TERMINAL E of thermostat. If there is none, replace thermostat.
5. If water is insufficiently hot, insure thermostat is flush with tank.
6. Verify a good wire connection between ECO TERMINAL-C and heating element TERMINAL-F. Correct if necessary.
7. Check for continuity between heating element TERMINAL-F and TERMINAL-G. If none, element is bad and should be replaced. Do not over-tighten self-tapping screws when installing new element.
8. There should NOT BE CONTINUITY between element screw-G and flange of element. If there is, element has shorted. Element should be replaced.
9. Verify ground connection.

NOTE: Heating element can be operated on an empty tank for a limited period of time before it self destructs.

ELECTRONIC IGNITION MODELS

QUESTIONS

The following questions should be answered during this portion of the manual:

- What is minimum gas pressure for proper water heater operation?
- Where on the gas solenoid valve can gas pressure be tested?
- What is the minimum voltage needed for operation?
- What is the proper wiring hook-up for the water heater circuitry?
- Can the Circuit Board Tester be used on both Fenwal and Channel circuit boards?
- How can the Circuit Board Tester be used to check a "flying lead" circuit board?
- What conditions can cause tracks on the back of the circuit board to blow?
- What is a proper main burner air shutter adjustment?
- What is the function of the thermal cut-off?

Atwood 6 and 10 gallon Electronic Ignition Water Heaters

Atwood water heaters are designed and approved for use only in recreation vehicles (travel trailers, 5th wheels, motor homes, etc.). They are offered in two sizes: 6 and 10 gallon capacities.

TYPE OF GAS IGNITION -
This unit is ignited inside of the trailer by a remote ON/OFF switch. The water temperature is preset at 140° F.

EXPLANATION OF MODEL NUMBER:

Electronic Models

G C H 6 A - 9 E

- E → Electronic Ignition
- 9 → Version
- A → Type of heating element (GC_ A - _ _ = bolt on, GC_ A A-_ _ = screw in)
- 6 → Gallon capacity (6 or 10)
- H → Engine heat exchange
- C → Combination gas and 110VAC electric
- G → Propane Gas

NOTE: When replacing the element on a combination gas/110 VAC unit, always check the back of the heater for the type of element it has. It will either be a bolt-on or screw-in element. They are not interchangeable.

FEATURES

- All units operate on propane gas.
- A pre-set thermostat set for 140° F. An aftermarket retro-fit adjustable thermostat is available and adjustable from 110° to 150° F.
- A heat exchange option is available. The water heater tank must have factory equipped heat exchange tubes welded on it already. They cannot be added later. A new water heater tank with this feature must be installed to use the heat exchanger.
- Skin mounting allows the water heater to be hooked up with plumbing and electrical before the sidewall is erected.
- This heater has a comparable, if not superior, anode type protection for the tank. The tank is manufactured with a clad aluminum lining that protects against corrosion but does not need to be replaced yearly as an anode rod. A more detailed explanation of cladding is found in the back of this manual.
- 95% of all servicing is done on the outside of the water heater. 110 VAC heating components are the exception. Since they are located on the back of the water heater inside the trailer.
- A flush flange is available for all models. This makes the access door flush with the sidewall.
- There are multiple protection features in the form of a pressure-temperature relief valve, a limit switch in the gas thermostat and an externally sealed combustion chamber.
- Both the six and ten gallon units have the lightest weight in the industry.
- On all trailers purchased after June 1, 1997 the Atwood Limited Warranty is for a period of two years. This includes all reasonable labor charges.
- We have 700+ Service Centers throughout the United States.

Recommended Tools and Equipment

U-Tube Manometer - This is the most accurate device for measuring gas pressure. If you use a dial-type manometer, it should be calibrated periodically with this type of manometer.

Multi-meter - This is the most versatile meter and will test continuity and 12VDC. These tests will allow one to verify voltage problems or faulty components. The entire electronic system can be tested with this meter.

U-TUBE MANOMETER
with 1/8” pipe nipple

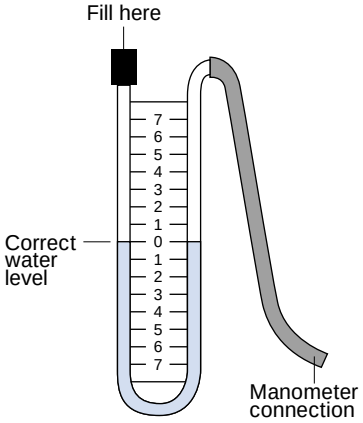

MULTI-METER TO TEST CONTINUITY & VOLTAGE

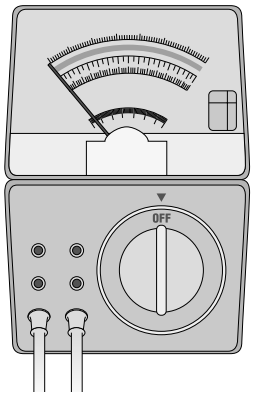

Circuit Board Tester - The tester is capable of testing any of the circuit boards (Fenwal and Channel models) that we have used on our water heaters. It is a simple table top device that will diagnose the following items on a circuit board: power circuit, sense circuit, spark generation and the lock-out mode. For use on circuit boards with a flying lead connection, splice a wire into the black wire of the tester harness with a 1/4˝ male terminal on the free end.

CIRCUIT BOARD TESTER
MPD 32779

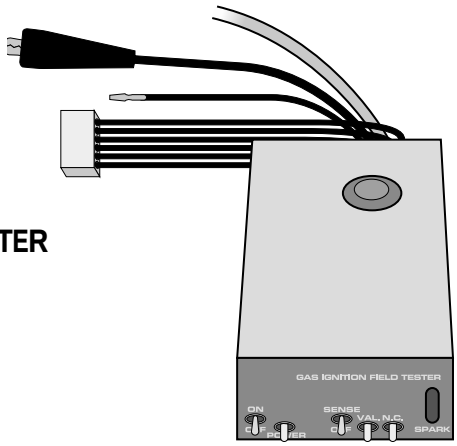

Common Hand Tools - 1/8˝ and 1/4˝ nut drivers, open end wrenches, flat blade and Phillips screw drivers.

Leak Test Solution - A solution that bubbles when applied to gas fittings or connections showing where a gas leak is present.

DSI Sequence of Operation

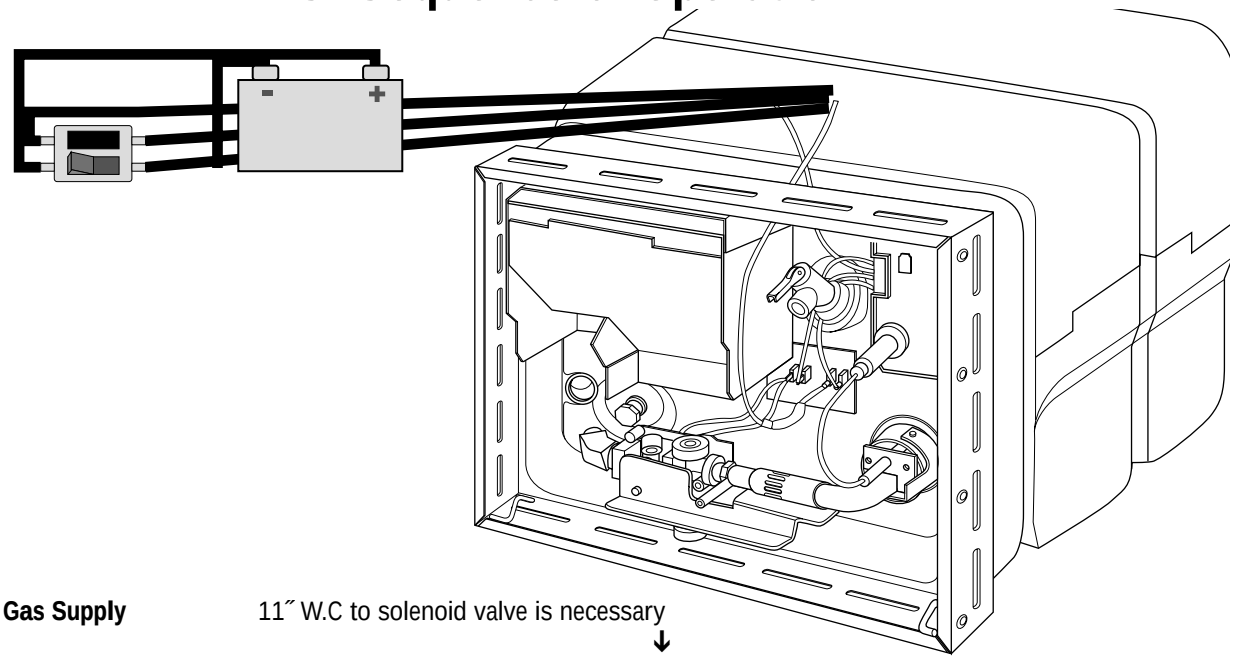

- **Gas Supply** — 11˝ W.C to solenoid valve is necessary

↓

- **12VDC Battery or filtered side of Convertor** — Voltage source to water heater

↓

- **ON/OFF Switch** — It supplies 12VDC to water heater

↓

- **Thermal Cut-Off** — A one shot heat sensing fuse that's normally closed and sends power to the thermostat. When tripped by excessive heat (190°F), (i.e. blocked burner or flue tube) it cuts power to the circuit board and shuts down ignition.

↓

- **Thermostat** — A normally closed non-adjustable temperature switch that sends current to the circuit board. It opens when the water temperature reaches approximately 140°F.

↓

- **Circuit Board** — The next step is the direct spark ignition system. For a period of 6-8 seconds the circuit board will send voltage to both the gas solenoid valve and the electrodes. If ignition does not occur, the board goes into a lock-out condition and the non-ignition light illuminated at the ON/OFF switch.

• E.C.O.

A normally closed safety temperature switch that sends voltage to solenoid valve. The switch opens if the water temperature exceeds 180°F.

↓

• Gas Valve

The dual solenoid valve that opens and sends gas to electrodes when a minimum of 10.5 VDC is applied to it.

• Electrodes

Creates a spark to ignite gas. If the electrodes do not sense a flame in 6-8 seconds, a signal is sent to the board to shut the gas valve down and the system goes into safety lock-out.

NOTE: If this situation exists, the ON/OFF switch must be turned off and back on again.

Atwood
Atwood Mobile Products
4750 Hiawatha Drive • Rockford, IL 61103-1298
PHONE: 815•877•5700 **FAX:** 815•877•7469
INTERNET: http://www.atwoodmobile.com

Electronic Ignition Water Heater

TROUBLE SHOOTING GUIDE

Effective: 5/26/98

Guides are only intended for use on Atwood® products by service technicians who have successfully completed Atwood® training. This guide should be used in conjunction with the appropriate Instruction Manual provided with the product and any applicable Industry standards. This is not intended to be a complete list. Please direct questions concerning service of Atwood® products to 800-825-4328 before proceeding.

CAUSE	SOLUTION
WATER HEATER LOCK OUT - SPARK PRESENT BUT NO GAS	
Gas pressure incorrect	Set inlet pressure at a minimum 11˝ W.C. with two or more gas appliances running
Low voltage	Correct power supply - 10.5 VDC minimum
Blocked main burner tube	Clean burner tube
Blocked main burner orifice	Clean or replace orifice
Loose wires on E.C.O.	Secure wire connections
Loose wire connections on solenoid valve	Secure wire connections
Loose valve wire on wiring harness	Repair wire on edge connector or replace wiring circuit board harness
Defective E.C.O.	Replace E.C.O.
Defective circuit board	Replace circuit board
Defective solenoid valve	Replace coils or solenoid valve
No gas to solenoid valve	Correct gas supply
Dirty connector on circuit board	Clean edge connector
WATER HEATER LOCK OUT - GAS PRESENT BUT NO SPARK	
High tension lead wire loose	Secure wire connection on circuit board
Electrodes loosely attached to main burner	Secure electrodes to main burner
Improper electrode gapping	Re-position spark gap to 1/8˝ and into path of flame
Dirty electrodes	Clean electrodes
Wires loose in electrode porcelain	Replace electrodes
Cracked porcelain on electrode	Replace electrodes
Defective circuit board	Replace circuit board
WATER HEATER LOCK OUT - GAS AND SPARK PRESENT	
Gas pressure incorrect	Set inlet pressure at a minimum 11˝ W.C. with two or more gas appliances running
Low voltage	Correct power supply - 10.5 VDC minimum
Poor electrical ground	Secure electrical ground
Electrodes out of flame pattern	Re-adjust electrodes
Electrodes sparking to screw fastening burner to flue tube	Adjust electrodes away from screw
Dirty electrodes	Clean electrodes
Partial obstruction in main burner	Clean main burner
Partially obstructed main burner orifice	Clean main burner orifice or replace
Improper air adjustment	Adjust main burner air shutter approximately 1/4 open
Flame spreader on main burner out of adjustment	Adjust flame spreader so that it is square to the end burner tube out of alignment of the main burner
Manifold not aligned with main burner	Re-align solenoid valve with main burner
Partially opening solenoid valve	Replace solenoid valve
Defective circuit board	Replace circuit board

continued

CAUSE	SOLUTION
EXCESSIVE OR INSUFFICIENT WATER TEMPERATURES	
By-pass kit valves not set properly	Place valves in proper position
Thermostat not seated against tank	Reseat thermostat
Defective thermostat	Replace thermostat
ERRATIC BURNER FLAME OR SOOTING	
Low gas pressure	Set inlet pressure at a minimum 11˝ W.C. with two or more gas appliances running
Poor gas supply	Replace gas supply
Improper air adjustment	Adjust main burner air shutter approximately 1/4 way open. Flame should be mainly blue and quiet.
Poor main burner alignment	Adjust valve and main burner alignment
Misaligned burner flame spreader	Align flame spreader so it is square with end of burner tube.
Blocked burner orifice	Clean orifice. DO NOT enlarge orifice
Obstructed main burner	Clean main burner
Obstructed “U” tube	Clean “U” tube
Obstructed exhaust grille	Remove obstruction
NO SPARK AND NO GAS	
No voltage	Correct power supply - minimum 10.5 VDC
Dirty edge connector on circuit board	Clean edge connector
Defective thermal cut-off	Replace thermal cut-off
Defective ON/OFF switch	Replace switch
Defective circuit board	Replace circuit board
Defective thermostat	Replace thermostat

Atwood
Atwood Mobile Products
4750 Hiawatha Drive • Rockford, IL 61103-1298
PHONE: 815•877•5700 **FAX:** 815•877•7469
INTERNET: http://www.atwoodmobile.com

INTERMITTENT IGNITION

Electronic Ignition Water Heater

INFORMATION GUIDE

Effective: 8/21/00

Guides are only intended for use on Atwood® products by service technicians who have successfully completed Atwood® training. This guide should be used in conjunction with the appropriate Instruction Manual provided with the product and any applicable Industry Standards. This is not intended to be a complete list. Please direct questions concerning service of Atwood® products to 800-825-4328 before proceeding.

1. **CHECK ALL OF THE WIRE CONNECTIONS.**
Poor or corroded wire connections cause most of the intermittent problems in water heaters. You should go through and pull all of the wires off any spade connections. Then reconnect them and ensure the connections are tight and corrosion free.

We want to point out two connections often overlooked.

First, check the (green) ground wire of the circuit board. This wire screws down under the circuit board mounting screw. If that screw for the board is loose, you may not have a secure ground.

Second, check the four wire edge connector going into the circuit board. Remove the circuit board. Take a pencil eraser and clean the marks off the connection of the circuit board. Reconnect the four wire edge connector onto the circuit board and then immediately remove it. Look at the edge connection of the board. You need to see four good scratches in the connection. If you do not see four scratches, then you will need to repair the edge connector or replace the wire harness.

2. **CHECK THE INTEGRITY AND POSITION OF THE SPARK PROBE ASSEMBLY.**

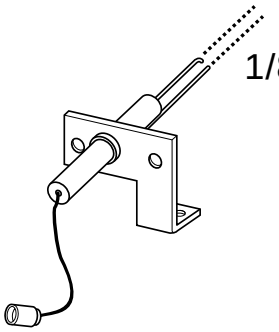

The gap between the sparking probe and the ground probe should be 1/8 inch. The probes should be clean and free of cracks, flaking and corrosion. Position the probes so that they are in the path of the gas flow. Cracks in the ceramic insulator can also be the source of an intermittent problem. To check for cracks insert a fiber washer or any other type of insulation material in the 1/8” gap between the rods. Remove the gas valve from the circuit and turn the unit on. If you see a spark jumping from the ceramic to the ground rod or bracket, replace the spark probe.

3. **CHECK THE ALIGNMENT OF THE MAIN BURNER TO THE ORIFICE.**
Position the main burner tube (A) so that the gas coming out of the orifice (B) is going straight down the middle of the burner tube. If the alignment is off, the gas will bounce down the tube which will alter the gas flow once it reaches the spark. Manually shift the valve (C) with your hands to achieve this alignment.

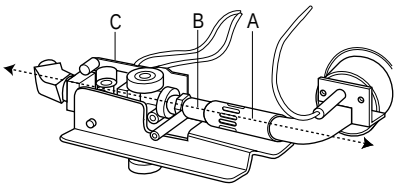

4. **CHECK THE ALIGNMENT OF THE FLAME SPREADER ON THE BURNER TUBE.**

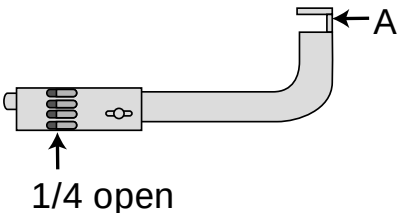

At the end of the burner tube there is a dime-shaped deflector disk. This disk spreads the flame out for proper heat distribution. Align the flame spreader (A) so that it is parallel to the end of the tube and positioned in the center of the end of the tube. If the flame spreader is out of position, it could divert the gas away from the spark and cause intermittent ignition.

continued

5. **CHECK THE AIR ADJUSTMENT.**
The burner tube has an adjustable air shutter on it at the end where it goes over the orifice. Position the air shutter so that it is 1/4 of the way open. We are looking for a blue flame with small traces of yellow in the flame. If the flame is fairly quiet then it is adjusted correctly.

6. **CHECK THE CLEANLINESS OF THE ORIFICE.**
The orifice is the hex head brass fitting that is screwed onto the brass manifold of the valve. You will have access to this part once the burner has been removed. Remove the brass orifice and clean with isopropyl alcohol. **NEVER** enlarge the size of the orifice.

7. **CHECK FOR OBSTRUCTIONS IN THE MAIN BURNER TUBE.**
The cleanliness of this tube is very important. Spider webs, soot and other debris can accumulate, causing problems with gas flow down the tube. We recommend cleaning the burner tube with a brush and not compressed air. Compressed air may not fully remove the obstruction.

8. **CHECK THE CLEANLINESS OF THE FLUE TUBE.**
The flue tube is the 2-1/2 inch diameter tube that starts at the bottom right corner of the water heater (where the main burner flame enters) and comes out the top left. This tube can become blocked by debris like insect nests or soot. To clean remove the metal flue box in the top left corner of the water heater. To facilitate cleaning unfold a wire hanger, wrap a rag around the end and use this to swab out the tube.

9. **CHECK THE VOLTAGE TO THE VALVE.**
Make sure that the voltage to the gas solenoid valve is between 10.5 and 13.5 volts DC. Voltage drops can occur at almost any component. Turn on another twelve volt appliances when you check the voltage so that you can see how the converter is working with a load. The voltage itself can be intermittent. With linear converters the 12 VDC varies depending on the 115 VAC. If the 115 VAC is high then the 12 VDC will be high, and if the 115 VAC is low then the 12 VDC will be low. If the power to the water heater is connected to the unfiltered side of the converter, move it to the filtered side.

10. **CHECK THE GAS PRESSURE OF THE RV.**
Make sure the gas pressure of the RV is checked with preferably the furnace and the range on to simulate a load. The pressure should be 11 inch water column under load. Besides gas pressure being at the proper level there are other strange things that can happen inside gas lines that cause intermittent problems. We have seen oil build up in a gas line that meant there was good pressure to one appliance but not the correct pressure to another appliance. Moisture could also build up in the gas line that would freeze and partially block the line. Intermittent pressure from the regulator of the bottles is still another area that should be investigated.

11. **INTERMITTENT CIRCUIT BOARD.**
If you have gone through all of the above checks and the intermittent problem is still occurring, only then check the circuit board. Ensure the circuit board is clean and reasonably moisture free before you change it.

There are two major points that should have stood out to you from this list.

First, the majority of intermittent ignition problems on Atwood electronic ignition water heaters can be corrected by cleaning certain components or making simple adjustments.

Second, ignition problems can be found in other components than the circuit board. The circuit board is not the end all solution to ignition problems. This mindset developed a number of years ago with the introduction of the first circuit boards that were not very reliable. We’ve learned a lot since then. Technology has progressed making today’s circuit boards very reliable. The circuit board can only do what the other components of the water heater allow it to do.

**POTTED CHANNEL CIRCUIT BOARDS

Atwood **potted circuit boards can be tested using a multi-meter. This test must be performed with the circuit board removed, and the meter set to the ohms scale. This will check the continuity of all tracks on the harness connection of the board.

The following steps should be used to test each track.

A. Cross leads of meter to ensure it is registering continuity.

B. **TO TEST POWER TRACK**:
Place negative lead of the multi-meter to ground (green wire) track of edge connection and positive lead of the multi-meter to top power (brown wire) track of edge connection. If no continuity, board is defective. *Atwood does not warranty this installation related failure.

C. **TO TEST LAMP TRACK**:
Place negative lead of the multi-meter to ground (green wire) track of edge connection and positive lead of the multi-meter to lamp (blue wire) track of edge connection. If no continuity, this indicates blown lamp track. Circuit board will still fire unit but lamp light will not come on. This is caused by a short in the blue wire between the unit and the switch. Wiring must be corrected before the board is replaced. *Atwood does not warranty this installation related failure.

D. **TO TEST VALVE TRACK:**
Place negative lead of the multi-meter to ground (green wire) track of edge connection and positive lead of the multi-meter to valve (red wire) track of edge connection. If no continuity, this indicates a blown valve track.
- If the valve wire is shorting under the flue box – Atwood will warranty the board.
- If the E.C.O. terminals are contacting the drawn pan – Atwood will warranty the board only if the inner tank of the water heater was installed flush on the floor of the coach.
- If the inner tank of the water heater does not rest flush against the floor of the coach –*Atwood does not warranty this installation related failure.

* Installation related failures on circuit boards are the responsibility of the coach manufacturer.

** Non potted circuit boards can be checked by turning the board over and visually inspecting each track for a burn mark or break in the track itself. A burn mark or broken track indicates the board is blown. Depending on which track is blown determines whether it is covered under Atwood's warranty as stated in section B, C and D.

THERMAL CUT-OFF DEVICE

Current Atwood direct ignition water heaters are equipped with a thermal cut-off device. This device is located on the incoming power wire and is connected to the thermostat. The thermal cut-off is designed to permanently break circuit and shut down the water heater before excessive heat can cause damage due to obstructions in the main burner tube or flue tube caused by spiders or mud wasps. These obstructions can cause the main burner flame to burn outside the main burner tube. When the flame or the heat from the flame contacts the thermal cut-off, the circuit will open.

If there is **no heat damage** to the thermal cut-off, and if it is determined defective, Atwood will cover the replacement of this device under warranty. We will allow .25 hour at your Atwood approved warranty rate. If there **is heat damage** the device performed its safety feature and no warranty labor will be allowed. Any obstructions should be removed, alignment checked and gas pressure taken before a new thermal cut-off is installed.

Note: When replacing a thermal cut-off, also examine the grill in the access door while the door is in the closed position. The wide aluminum band of the grill should be at the bottom. If it is at the top, this condition may trap exhaust heat and possibly also cause thermal cut-off to trip. To correct, remove the grill from the door and snap back in place with the wide aluminum band at the bottom.

THERMOSTAT

The thermostat on this water heater is pre-set at 140° F. The water heater will cycle off when the water temperature reaches 140° F. and will generally take 20-25 minutes to reach this temperature. It will cycle back on when the water temperature cools down to approximately 115° F. In the latter part of the heating cycle though, it is very common for the pressure-temperature relief valve to weep. Refer to the page covering weeping relief valves to remedy this situation.

If a customer is dissatisfied with the temperature of the water, first check the water temperature with a cooking thermometer and verifying that the initial cycle is within the time noted above. If not, an adjustable thermostat may be purchased allowing the water temperatures to be adjusted from 110 - 150° F. It fits in place of the original thermostat.

Water Heater Wiring Schematics

Wiring Schematic
G6A-2E, G6A-3E, GH6-4E, GH6-3E Water Heaters (Rear Mount ECO and Thermostat Models).

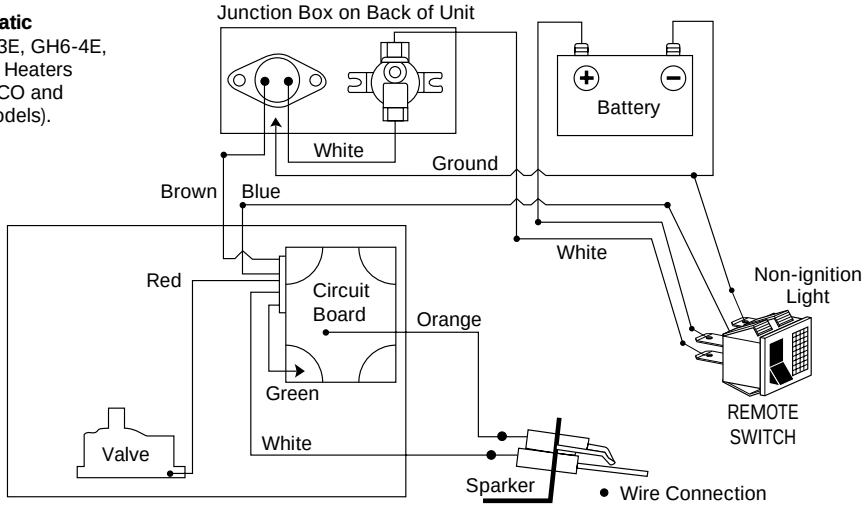

Wiring Schematic G6A-3E, G6A-4E, GH6-3E, GH6-4E, GCH6-4E, G6A-6E, GCH6-6E, GH6-6E Water Heaters (Front Mount ECO and Thermostat Models).

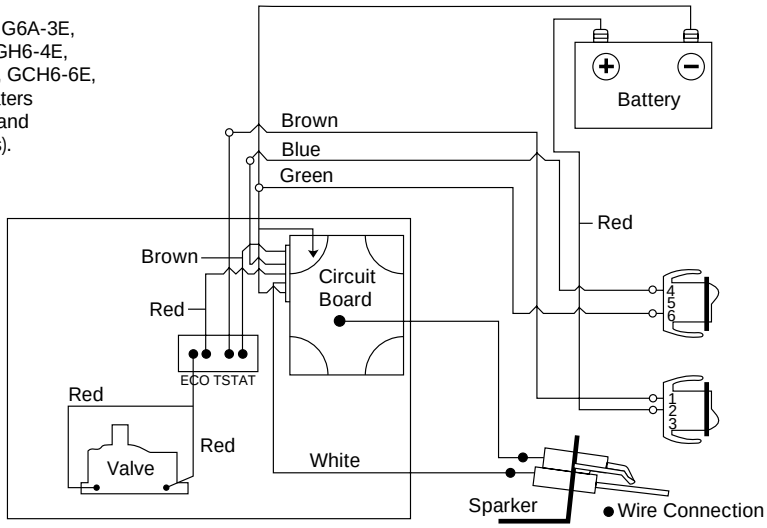

Wiring Schematic G6A-7E, GH6-7E, GC6A-7E, GCH6-7E, GC6AA-7E, G6A-8E, GH6-8E, GC6AA-8E, GCH6AA-8E, GCH6A-9E

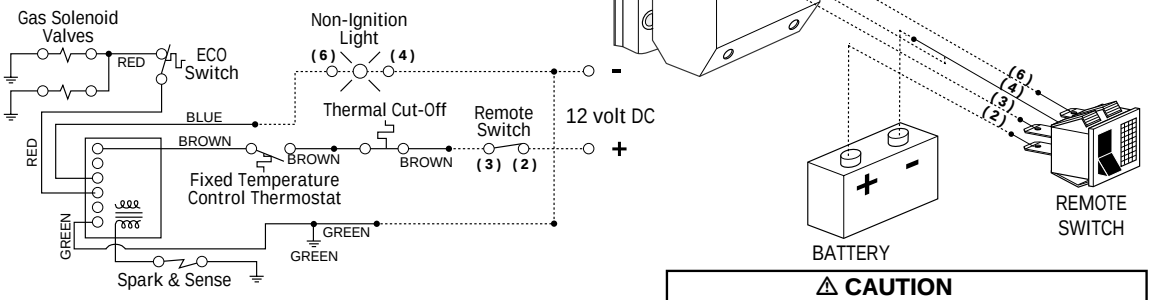

Dotted lines are wired by customer

⚠ CAUTION
When servicing controls, label all wires prior to disconnection. Wiring errors can cause personal injury or property damage. Verify proper operation after servicing.

Dotted lines are wired by customer

12 WIRING DIAGRAMS

Dotted lines are wired by customer

COMBINATION GAS/ELECTRIC

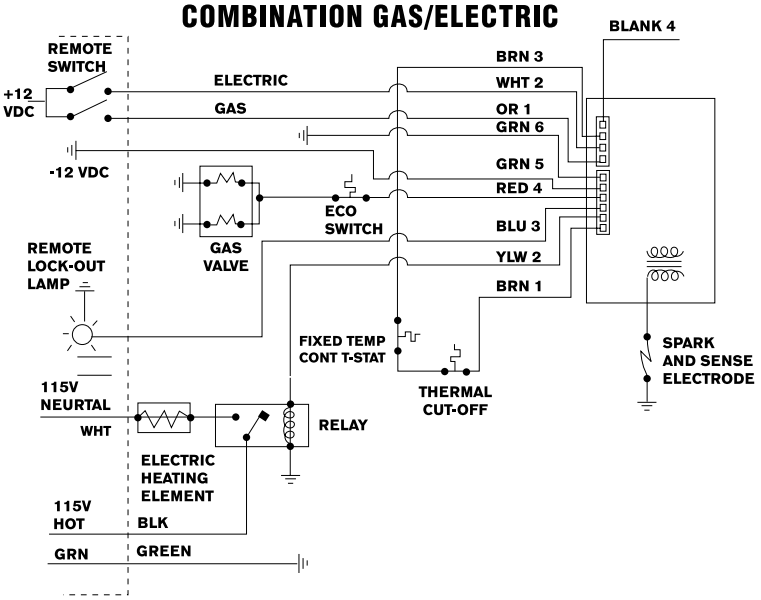

PILOT RELIGHT

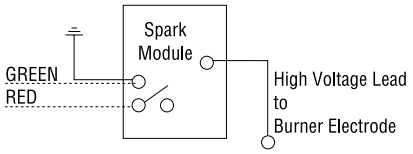

110V ELECTRIC/GAS PILOT ONLY

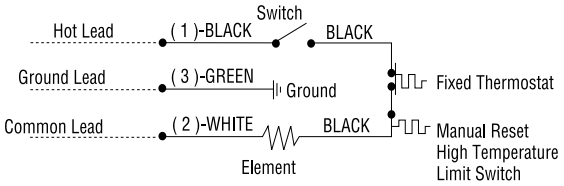

GENERAL INFORMATION

QUESTIONS

The following questions should be answered during this portion of the manual:

· What causes the pressure-temperature relief valve to weep when unit is in heating cycle?

· How can weeping pressure-temperature relief valves be reduced or eliminated?

· What are the proper draining procedures to help reduce lime deposits and extend tank life?

· Will a tank split for any other reason besides freezing?

· What functions do the retaining rings serve when replacing an inner tank?

· What are the most common ways to winterize a tank?

PRESSURE-TEMPERATURE RELIEF VALVE

Weeping or dripping of a pressure-temperature relief valve while the water heater is running DOES NOT mean it is defective. This is normal expansion of water as it is heated in the closed water system of a recreation vehicle. The Atwood water heater tank is designed with an internal air gap at the top of the tank to reduce the possibility of weeping and dripping. In time, the expanding water will absorb this air. To replace the air follow these steps:

Step 1: Turn off water heater
Step 2: Turn off incoming water supply
Step 3: Open the closest hot water faucet in the coach
Step 4: Pull handle of pressure-temperature relief valve straight out and allow water to flow until it stops.
Step 5: Allow pressure-temperature relief valve to snap shut, turn on water supply and close faucet.

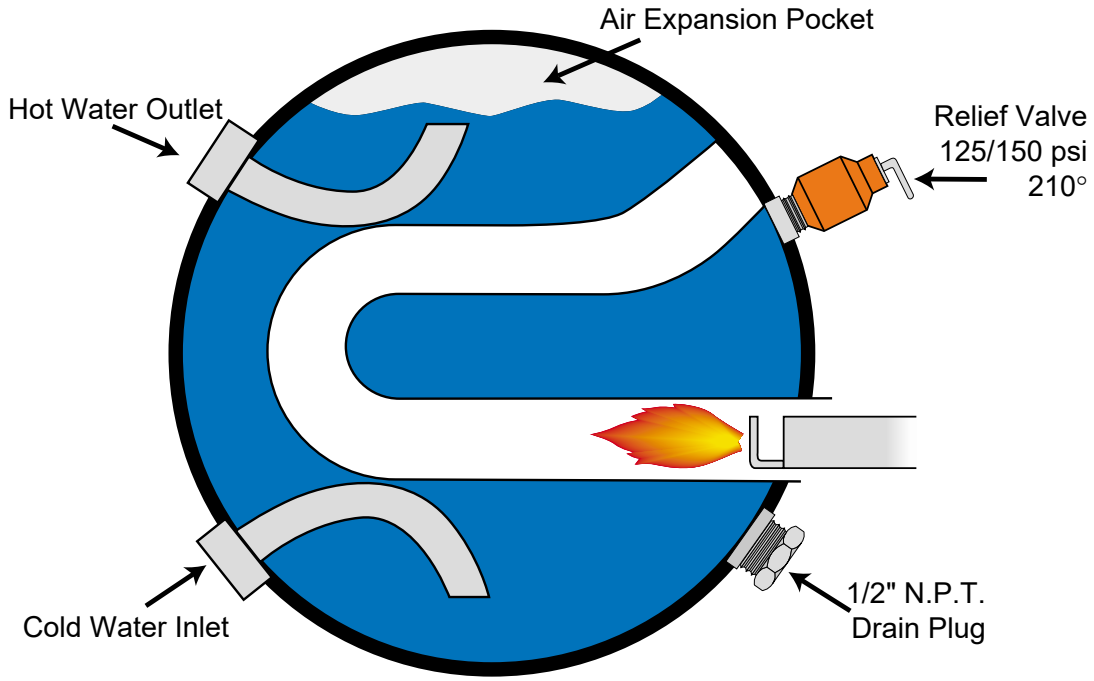

WATER HEATER TANK CORROSION

Pinhole leaks from galvanic corrosion may cause the water heater tank to fail.

Microscopic particles of metals (like iron and copper) suspended in water, set up a reaction inside the water heater that is not unlike the principle on which an automotive battery operates. The aluminum tank is the anode and the metals in the water serve as the cathode. Consequently, the aluminum gradually sacrifices itself and aluminum particles are carried away with the water flow.

A white scaly material (aluminum oxide) often is formed around the points where the heaviest action is taking place and heat accelerates the process. Severity of the problem varies considerably in different locales depending on the metal and mineral content of the water. White deposits inside the water heater tank are usually from water impurities that have settled out.

Periodic flushing of the water heater tank under pressure is recommended to slow down this process. For flushing instructions see your owners manual or contact Atwood for a copy of our recommended procedure.

ATWOOD CLAD TANK

The Atwood water heater tank is constructed of a core of high strength aluminum. The interior of the tank consists of a 15% thickness of type 7072 aluminum (pure aluminum and zinc) that is fused to the core during the rolling process. This material protects the tank from the affects of heavy metals and salts found in waters throughout the country. It is anodic to these heavy metals and acts much like an anode in a steel glass lined tank except it will last much longer. There is also no need to replace an anode on a yearly basis.

Flushing the tank on a regular basis has been found to be helpful in insuring the best performance of your water hater and adding to the useful life of the tank. For flushing instructions see your owners manual or contact Atwood for a copy of our recommended procedures.

FLUSHING YOUR WATER HEATER TO REMOVE THE ROTTEN EGG ODOR

1. Turn off your main water supply. Drain you water heater tank. Reinstall drain plug. Remove the pressure-temperature relief valve. With a funnel use 4 parts white vinegar to two parts water. (In a 6 gallon tank that would be 4 gallons vinegar to 2 gallons water).
2. Cycle the water heater, letting it run under normal operation 4-5 times. At no time do you remove the vinegar from the tank Once this has been completed, remove the drain plug and drain the water heater.
3. After thoroughly draining the tank, to remove the sediment, flush the water heater.

   If you elect to use air pressure, it may be applied either through the inlet or outlet on the rear of the tank or applied through the pressure-temperature relief valve. Remove the pressure-temperature relief valve and insert your air pressure through the pressure-temperature relief valve coupling. In either case, with the drain valve open, the air pressure will force the remaining water out of the unit.

   If air pressure is unavailable, your unit can be flushed with fresh water. Fresh water should be pumped into the tank either with the onboard pump or external water pressure. External pressure may be hosed into the unit either through the inlet or outlet found on the rear of the tank or the pressure-temperature relief valve coupling located on the front of the unit. Continue this flushing process for approximately five minutes allowing ample time for the fresh water to agitate the stagnant water on the bottom of the tank and forcing the deposits through the drain opening.
4. Upon completion of the steps above, replace the drain plug and the pressure-temperature relief valve.
5. Refill tank with fresh water that contains no sulphur.

The Atwood water heater is designed for use in a Recreation Vehicle. If you use your vehicle frequently or for long periods of time, flushing the water heater several times a year will prolong the life of the storage tank.

WINTERIZING INSTRUCTIONS

1. Turn off your main water supply, that is, your pump or your water hook up source.
2. Drain your water heater inner tank. Upon doing so, you will note that, due to the location of the drain plug, approximately two quarts of water will remain in the bottom of the tank. This water contains most of the harmful corrosive particles. If while draining the unit, you note that it is flowing sporadically or trickling, instead of flowing steadily, we recommend one of two things. You should first open your relief valve to allow air into the tank and secondly, take a small gauge wire or coat hanger device and prod through the drain opening to eliminate any obstructions.
3. After thoroughly draining the tank, you should then flush it with air pressure or fresh water. If you elect to use air pressure, it may be applied either through the inlet or outlet on the rear of the tank. It may also be applied through the relief valve part. In this case, it will be necessary to first remove the relief valve support flange. In either case, with the drain valve open, the air pressure will force the remaining water, along with the corrosive particles, out of the unit. However, if air pressure is unavailable, your unit can be flushed with fresh water. Fresh water should be pumped into the tank either with the assistance of the on-board pump or with the assistance of external water either through the inlet or outlet found on the rear or the relief valve coupling located on the front of the unit. Continue this flushing process for approximately five minutes allowing ample time for the fresh water to agitate the stagnant water on the bottom of the tank and thus forcing the deposits through the drain opening.
4. Upon completion of the steps above, replace the drain plug and the pressure-temperature relief valve.
5. After this procedure, there will be approximately two quarts of water left at the bottom of the inner tank. Should this water freeze it will not cause any splitting of the tank.

WATER HEATER TERMINOLOGY

Terminology	Definition
AGA	American Gas Association
Access Door	hinged cover on outside of water heater
By Pass Kit	a combination of hoses and valves that can aid in the winterization of the water heater
CGA	Canadian Gas Association
Calibration	the condition determining whether the thermostat is registering temperatures properly
Cam-Loc Fastener	a door securing device
Circuit Board	an electronic panel that controls the spark, solenoid valve and senses the main burner flame
Drawn Pan	metal pan attached to the water heater tank and fastened to coach sidewall to isolate combustion to outside of coach
DSI	direct spark ignition a.k.a. electronic ignition
E.C.O. (energy cut off)	high temperature re-set shut off device
Electrolysis	electro chemical corrosive process that can cause pinholes in tanks
Fenwal Tester	a diagnostic circuit board analyzer
Flame Spreader	a round deflective piece found at the combustion end of main burner.
Flue Box	a chamber that separates air intake and exhaust
Flue Tube	combustion and water heating surface area on inside of tank
Flying Lead	flame sensing wire that is sometimes found hard wired to circuit board
Front of Water Heater	access door side of water heater
Gas Solenoid Valve	a 12 volt DC device that turns on or off the flow of gas
Immersion Element	an AC electrical heating coil that is immersed directly into water
Inverted Flare	type of connection using double flare fitting and tube nut
Inner Tank	patented, designed vessel for heating water
Jade® Knob Clip	a horse shoe retainer clip on main shaft of Jade® Gas thermostat that allows for proper moving of ON/OFF knob and shaft

Terminology	Definition
Main Burner	a gas and air mixing tube
Main Burner Air Shutter	the slotted sleeve on tube that allows for gas and air adjustment
Main Burner Orifice	a precision drilled fitting that regulates the BTU's of combustion
N.P.T. (Nat'l Pipe Thread)	a plumbing measurement standard
Pilot Assembly	A gas tube, orifice & thermocouple
Pilot Orifice	a precision drilled thimble shaped component that meters gas flow to pilot
Pilot Relight Ignition Module	12 volt electronic panel that provides spark ignition and flame sense to maintain pilot flame
Pressure-Temperature Relief Valve	a pressure and temperature safety device used on water heating vessels.
Ring and Gasket	retaining fiber & metal rings that secure combustion pan to tank
Sight Glass	burner flame viewing port on access door
Spark Probe Assembly	a spark electrode & flame sensing
Thermal Cut-Off	heat sensing diode that cuts power to circuit board if a flame backs out of the burner tube or flue tube normally caused by an obstruction in these areas
Thermostat (gas)	a temperature sensitive device for turning on and off the flow of gas (T-stat)
Thermostat (120 volt AC)	a surface mount temperature sensitive device that turns on/off heating element
Thermostat (12 Volt DC)	a surface mount temperature sensitive device that turns on/off the voltage to the circuit board
Thermocouple	a device, when heated, generates millivolts of electricity
UL	Underwriters Laboratories
"U" Tube	also referred to as a flue tube on some water heater models
Winterization	process of preparing a water heater for cold winter storage

ATWOOD WATER HEATER LIMITED WARRANTY

Atwood Mobile Products warrants to the original owner and subject to the below mentioned conditions, that this product will be free of defects in material or workmanship for a period of two years from the original date of purchase. Atwood's liability hereunder is limited to the replacement of the product, repair of the product, or replacement of the product with a reconditioned product at the discretion of the manufacturer. This warranty is void if the product has been damaged by accident, unreasonable use, neglect, tampering or other causes not arising from defects in material workmanship. This warranty extends to the original owner of the product only and is subject to the following conditions:

1. For a period of two years from the date of purchase, Atwood will replace the complete water heater if the inner tank leaks due to corrosion. This warranty includes reasonable labor charges required to replace the complete water heater.
2. For two years from the date of purchase, Atwood will repair or replace any part defective in material or workmanship. This warranty includes reasonable labor charges, required to remove and replace the part. Service calls to customer's location are not considered part of these charges and are, therefore, the responsibility of the owner.
3. This warranty does not cover the following items classified as normal maintenance:
   a. adjustment of gas pressure
   b. cleaning or replacement of burner orifice
   c. cleaning or adjustment of burner tube
   d. cleaning or adjustment of flue
   e. cleaning or adjustment of pilot and thermocouple
   f. adjustment of pressure-temperature relief valve
4. **In the event of a warranty claim, the owner must contact, in advance, either a certified Atwood Service Center or the Atwood Service Department. Warranty claim service must be performed at a certified Atwood Service Center (a list will be provided at no charge) or as approved by the Consumer Service Department, Atwood Mobile Products, 4750 Hiawatha Drive, Rockford, IL 61103-1298 USA. Phone: (815-877-5700).**
5. Return parts (or water heater) must be shipped to Atwood "Prepaid". Credit for shipping costs will be included with the warranty claim. The defective parts (or water heater) become the property of Atwood Mobile Products and must be returned to the Consumer Service Department, Atwood Mobile Products, 4750 Hiawatha Drive, Rockford, IL 61103-1298 USA.
6. This warranty applies only if the unit is installed according to the installation instructions provided and complies with local and state codes.
7. The warranty period on replacement parts (or water heater) is the unused portion of the original warranty period.
8. Damage or failure resulting from misuse (including failure to seek proper repair service), misapplication, alterations, water damage, or freezing are the owner's responsibility.
9. Atwood does not assume responsibility for any loss of use of vehicle, loss of time, inconvenience, expense for gasoline, telephone, travel, lodging, loss or damage to personal property or revenues. Some states do not allow the exclusion or limitation of incidental or consequential damages, so the above limitations or exclusions may not apply to you.
10. Any implied warranties are limited to two (2) years. Some states do not allow limitations on how long an implied warranty lasts, so the above limitation may not apply to you. This warranty gives you specific legal rights and you may also have other rights which vary from state to state.
11. Replacement parts (components or tanks) purchased outside of the original water heater warranty carry a 90 day warranty. This includes the part at no charge and reasonable labor charges to replace it.

This Atwood heater is designed for use in recreational vehicles for the purpose of heating water as stated in the "data plate" attached to the water heater. Any other use, unless authorized in writing by the Atwood Engineering Department, voids this warranty.

Warranty Procedures

Atwood water heater, furnace, range, hardware or detector warranties can be submitted in one of two ways.

If you are already set up with an owner care program with an OEM, you should submit the faulty part and claim through their system.

To submit a claim directly through Atwood the following information is required:

1. **Owner's Name and Address**.
2. **Date of Purchase** - obtain from copy of original bill of sale.
3. **Model and Serial Number** - The model and serial number, which is located on every water heater, furnace and range is required on all Atwood appliance claims.
4. **Manufacturer, Model, Year and VIN # of RV**.
5. **Work Performed** - Describe in detail findings of existing problem and corrective measure taken.
6. **Return Parts** - A "MUST RETURN" parts list is attached. Failure to return parts listed will result in denial of your warranty claim.
7. **Return Good Number** - a Return Goods Number (RGN) must accompany all returned parts. This number may be obtained by calling the Atwood Mobile Products Service Department at 1-800-825-4328. The RGN must be clearly marked on the outside of each carton. Failure to do so will result in your shipment being refused at our receiving department.
8. **Return Freight** - Atwood does not accept C.O.D. shipments. Freight to return parts to Atwood should be indicated on your claim or repair order and you will be reimbursed.
9. **Travel Time** - Because our warranty is based on the customers ability to present the unit for service, and in an attempt to maintain our low cost products, reimbursement for mileage, service calls and travel time **WILL NOT BE ALLOWED**.
10. **Payment for Warranty Service** - All parts are replaced at no charge, freight prepaid upon our inspection. Labor, on net 30 accounts is paid by credit memo within 30 days of receipt of parts.
11. **Flat Rate Schedule** - A reasonable flat rate schedule for warranty repairs has been set for each Atwood product and/or parts. Should unusual circumstances take you beyond the standard time allowance, you must have prior approval by contacting the Atwood Mobile Products Service Department at 1-800-825-4328, and press option 5 after the recording.

FOR EFFICIENT PROCESSING OF CLAIM

1. Call for a RGN number.
2. Fill Warranty Service Report form out completely.
3. Using tape or a tag mark the returning part with the RGN #.
4. Package part including the Warranty Service Report in the box.
5. On the outside of the package clearly mark the RGN number.
6. Return part to the correct Division of Atwood Mobile Products.

Return Goods Policy

Effective August 7, 1995, all Atwood defective returns will no longer be repaired at the warehouses and returned to customers. Defective returns will be shipped back to the respective manufacturing facility for problem cause analysis within 30 days of sales. Full credit will be issued if the cause analysis determines Atwood is responsible. If the cause analysis determines the customer is responsible, partial or no credit will be issued.

Warranty Returns - the warranty policy, must return policy and approved labor rates provide the framework for warranty returns by product line.

Non-Defective Returns - A restocking fee of 20% will be charged for handling of overstock returns or standard stock items ordered incorrectly by the customer providing the product is received in resalable condition. **Product that has been specifically designed at a customers request is non-returnable. Obsolete or out dated product will not be accepted for credit.**

Shipping Damage - Once the product has been accepted at its final destination it is the customers responsibility to file a damage claim with the carrier.

Follow **Warranty Procedures** for Atwood returns.

Return Parts

When returning parts, there are three divisions responsible for specific product and their claims. Prior to returning parts, a Return Goods Number (RGN) must be obtained by calling the Atwood Mobile Product Service Department at 800-825-4328.

Shipping - Reasonable shipping charges are reimbursed on defective and warranty parts if the analysis determines Atwood is responsible for the disposition. All products not shipped via Atwood trucks should be shipped prepaid via UPS ground unless negotiated at the time the RGN is given. No collect shipments will be accepted.

Packaging - The RGN must be identified on each container & all packing information. Product returned must be properly packaged to prevent shipping damage. Full credit will not be issued on product sent back on an open skid or improperly packaged. Additional product boxes are available upon request.

Submit claims to the correct division. Failure to do so makes claim processing a more difficult and lengthy process delaying payment of your claims. Together we can maintain a speedy and efficient warranty program.

WATER HEATERS//HARDWARE (jacks, couplers, 5th wheel & braking systems)
Atwood Mobile Products
4750 Hiawatha Drive
Rockford, IL 60013

FURNACE/LP DETECTORS
Atwood Mobile Products
Salt Lake City Operations
1874 South Pioneer Road
Salt Lake City, UT 84104

CO DETECTOR
KIDDE Safety (1-800-880-6788)
1394 South Third Street
Mebane, NC 27302

RANGE/COOK TOPS/DROP-INS/SOL-A-VENTS
Atwood Mobile Products
Wedgewood Operations
6320 Kelly Willis Road
Greenbrier, TN 37073

Must Return Parts List

Under Atwood's Warranty Administration Program we require, with the return of warranty claims, the specific parts noted below. **Failure** to accompany your claims with these parts will result in the **non-shipment of a replacement part,** or the **non-processing of the appropriate credit** until such time as the part is received by Atwood.

Before returning the part, a **RGN (Return Goods Number)** must be obtained. This number can be acquired for all products except seating, by calling the Atwood Mobile Products Service Department at 1-800-825-4328. To obtain RGN's for seating components, please call 1-219-522-7891. **Without this RGN appearing on the outside of the shipping carton, the shipment will be refused at our receiving department.**

FURNACE
- All parts

HARDWARE
- Couplers
- Jacks
- Actuators
- Master cylinders
- Shock absorbers
- Foundation brakes
- Power jacks
- Power jack motors
- All 5th Wheel items

RANGE & OVENS
- Regulators
- Oven thermostats
- Safety pilot valves
- Burner valves
- Manifolds
- Top pilot valves
- 12v ignition module
- Burners w/ignition electrode
- Complete ranges (BY APPROVAL ONLY)

SEATING COMPONENTS
- All parts

WATER HEATER
- Complete water heaters
- Inner tanks
- Gas thermostat valves
- Circuit boards
- Gas solenoid valves
- Electric thermostats
- Heating elements
- Pilot assemblies
- Spark probe assemblies
- E.C.O. & T-stat kits
- Thermal cut-offs
- Pressure-Temperature Relief Valves

Atwood
Atwood Mobile Products
4750 Hiawatha Drive • Rockford, IL 61103-1298
PHONE: 815•877•5700 **FAX:** 815•877•7469
INTERNET: http://www.atwoodmobile.com

Water Heaters

Flat Rate Schedule

June 17, 2003

TIME ALLOWANCE SCHEDULE in hours

Replacement of:	Standard Pilot Model	Electronic Ignition Model
Access Door	.30	.30
Circuit Board	N/A	.50
Complete Water Heater	1.50	1.75 *
Drain Valve or Plug	.30	.30 *
Electric On-Off Switch	.50	.50 *
Heating Element	1.00	1.00 *
Inner Tank	2.00	2.30
Main Burner	.50	.50
On-Off Light Wall Switch	N/A	.75
Pilot Assembly	.50	N/A
Pilot Ignitor Module	.50	N/A
Pressure-Temp. Relief Valve	.50	.50 *
Relay		.50 *
Solenoid Valve	N/A	.50
Spark & Probe Assembly	N/A	.50
Thermal Cut Off	N/A	.30
Thermostat & E.C.O.	N/A	.50 *
Thermostat-electric	.50	.50
Thermostat-gas	1.00	N/A

* indicates time allowed for Electric/Marine units

Note: All flat rates include diagnostic time and when applicable, gas leak test.

First number in matrix refers to illustration number, the second is the part number.

PILOT Water Heater
6 - 10 gallon

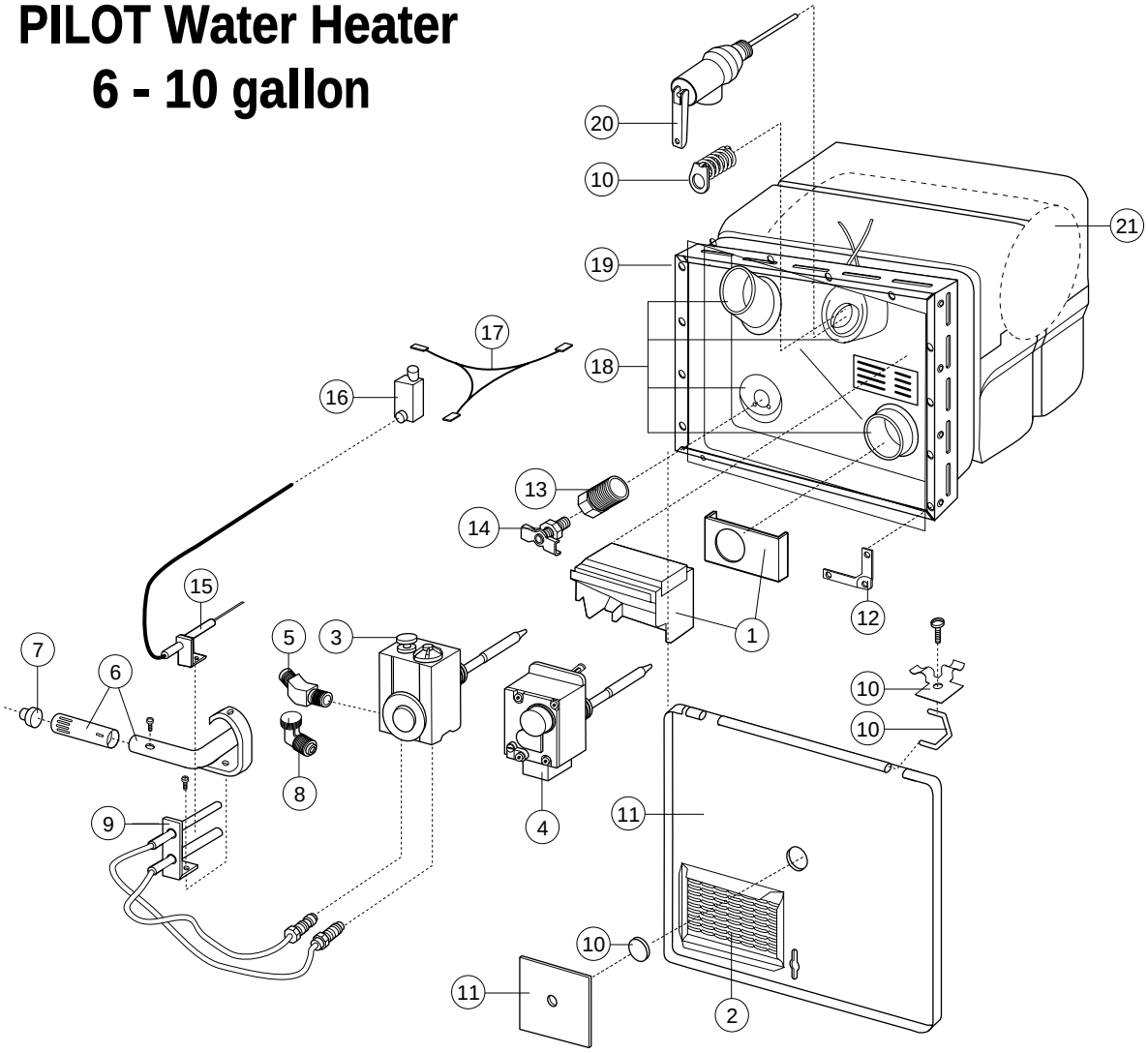

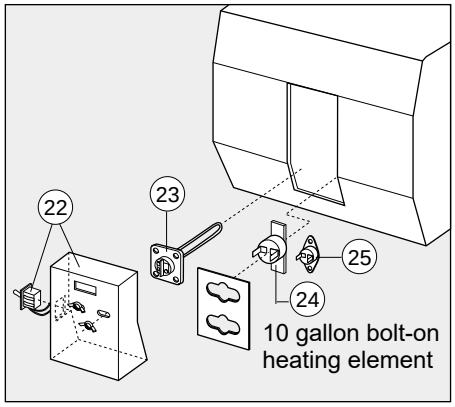

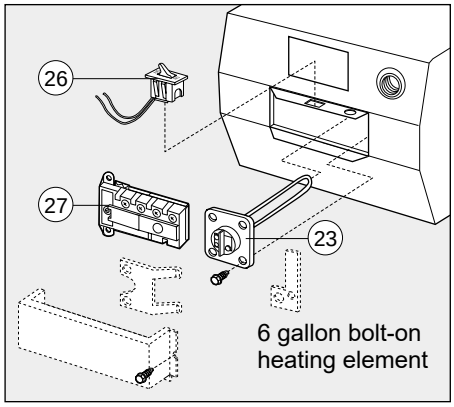

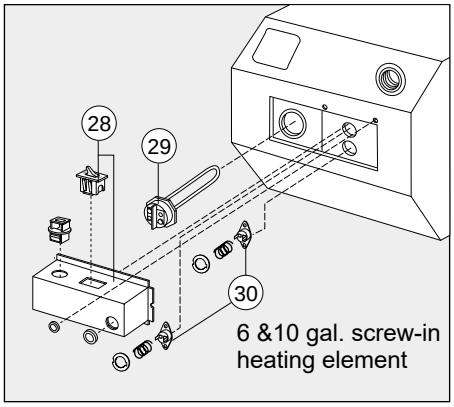

Pilot Water Heaters

REPLACEMENT PART REFERENCE
September 2003

			GC6A, GC6A-3, GC6A-6, GC6A-7	G6A, G6A-2, G6A-3, G6A-6, G6A-6P, G6A-7, G6A-7P	GH6-3, GH6-6, GH6-7	GC6AA-7, GC6AA-7P	GC6AA-8, GC6AA-8P	G610-3, G610-3E, GH610-3	G10B, G10C	GC10A-2	GC10A-2P	GC10-1, GC10-2, GC10-2P	G10-1, G10-1P, G10-2, G10-2P	G4SM
	93212	Piezo Ignitor Kit - battery operated (not shown) Retrofits on all pilot model water heaters												
	92616	Robertshaw Pilot - not shown	***No Longer Available (use 91603)***											
	92973	Inverted Flare Adapter (not shown)	×	×				×						
	93923	E.C.O.	***No Longer Available (Use 92942)***											
	92610	Gas Line Grommet (not shown)	×	×	×	×	×	×	×	×	×	×	×	×
	91346	Elbow Bushing - 1/4" inlet, 3/8" outlet	***No Longer Available***											
	91285	Jade Orifice fits 91603 Pilot (not shown)	×	×	×	×	×			×	×	×	×	
1	**90960**	Flue Box & Gasket	×	×	×	×	×	×	×	×	×	×	×	×
2	**92640**	Grille, New Style in Door	×	×	×	×	×	×		×	×	×	×	×
3	**91602**	Robertshaw Thermostat (3/8" NPT inlet, 3/8" NPT outlet)	×	×	×	×	×	×	×	×	×	×	×	×
4	**91601**	White Rodger thermostat (1/4" NPT inlet, 3/8" NPT outlet)	×	×	×	×	×	×	×	×	×	×	×	×
5	**91044**	45° Elbow 3/8" x 3/8" - OLD						×	×					×
	91347	Elbow - 1/4" x 3/8" inlet - NEW	×	×	×	×	×							×
6	**92615**	Main Burner 6 Gallon	×	×	×	×	×		×					
	93221	Main Burner 10 Gallon								×	×	×	×	
7	**92742**	Main Burner Orifice (6 Gal.)	×	×	×	×	×							
	93914	Main Burner Orifice (10 Gal.)							×	×	×			
8	**91441**	90° Elbow 3/8" x 3/8"								×	×	×	×	
	92741	Main Burner Orifice Elbow -outlet	×	×	×	×	×							×
9	**91603**	Jade Pilot	×	×	×	×	×	×						×
10	**91858**	Door Hardware Kit	×	×	×	×	×	×		×	×	×	×	×
11	**91514**	Access Door (6 Gallon) Colonial White	×	×	×	×	×	×						×
	93993	Access Door (10 Gal.)								×	×	×	×	
12	**91928**	Set of 4 Corner Brackets	×	×	×	×	×	×	×	×	×	×	×	×
13	**91857**	Drain Plug 1/2"	***Measure drain coupling***											
14	**92698**	Petcock Drain Valve 1/8"	***Measure drain coupling***											
15	**93804**	Piezo Electrode - hard-wired		×									×	
16	**93801**	Piezo Ignitor Module - hard-wired		×									×	
17	**93803**	Piezo Wiring Harness - hard-wired		×									×	
18	**96010**	Ring & Gasket Kit for service tank	×	×	×	×	×							×
19	**91796**	Drawn Pan 6 Gallon Pilot	×	×	×	×	×							×
	93935	Drawn Pan 10 Gallon Pilot								×	×	×	×	
20	**91604**	Pressure Temperature Relief Valve	×	×	×	×	×	×	×	×	×	×	×	×
21	**91174**	Fiberboard Jacket (6 Gal.)	***No Longer Available (Use 91240 & 91241)***											
	91240	Styrofoam tank cover - top	×	×	×	×	×							×
	91241	Styrofoam tank cover - bottom	×	×	×	×	×							×
	93912	Fiberboard Jacket (10 Gal.)	***No Longer Available (Use 91238 & 91239)***											

Pilot Water Heaters

REPLACEMENT PART REFERENCE
September 2003

			GC6A, GC6A-3, GC6A-6, GC6A-7	G6A, G6A-2, G6A-3, G6A-6, G6A-6P, G6A-7, G6A-7P	GH6-3, GH6-6, GH6-7	GC6AA-7, GC6AA-7P	GC6AA-8, GC6AA-8P	G610-3, G610-3E, GH610-3	G10B, G10C	GC10A-2	GC10A-2P	GC10-1, GC10-2, GC10-2P	G10-1, G10-1P, G10-2, G10-2P	G4SM
21	**91238**	Styrofoam tank cover - bottom						×	×	×	×	×	×	
	91239	Styrofoam tank cover - top						×	×	×	×	×	×	
22	**91182**	110VAC On/Off Switch & Jct Box (10 Gal.)									×			
23	**91580**	110 VAC Element (Bolt-on)	×									×		
24	**92942**	110VAC E.C.O. Switch								×	×	×		
25	**92943**	110VAC 140° Thermostat								×	×	×		
26	**92857**	110VAC On/Off Switch (6 Gal.)	***No Longer Available (use 910921 or 91116)***											
	92858	110VAC On/Off Switch (10 Gal.)	***No Longer Available (use 91089 or 91182)***											
26	**91092**	110VAC On/Off Switch (6 Gal.)	×			×	×							
	91089	110VAC On/Off Switch (10 Gal.)								×	×	×		
27	**91853**	110 VAC Thermostat (Rectangle)	×									×		
28	**91116**	110VAC On/Off Switch & Jct Box (6 Gal.)					×							
29	**91160**	110 VAC Element/Gasket (screw-in)	***No Longer Available (use 92249)***											
29	**92249**	110 VAC Element/Gasket (screw-in)				×	×			×	×			
30	**91873**	Thermostat/E.C.O. 110 VAC				×	×			×	×	×		
N/S	**93297**	Conversion to Pilot 6 gallon 110VAC	***No Longer Available (use 91591)***											
N/S	**93299**	Conversion to Pilot 10 gallon 110VAC	***No Longer Available (use 91596)***											
N/S	**91591**	Conversion to Pilot 6 gallon 110VAC		×										
N/S	**91596**	Conversion to Pilot 10 gallon 110VAC										×	×	

ELECTRIC SIDE
ELECTRIC WATER HEATERS

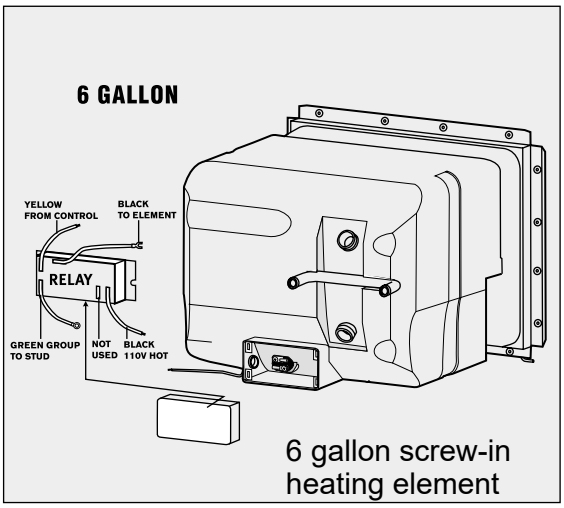

6 gallon screw-in heating element

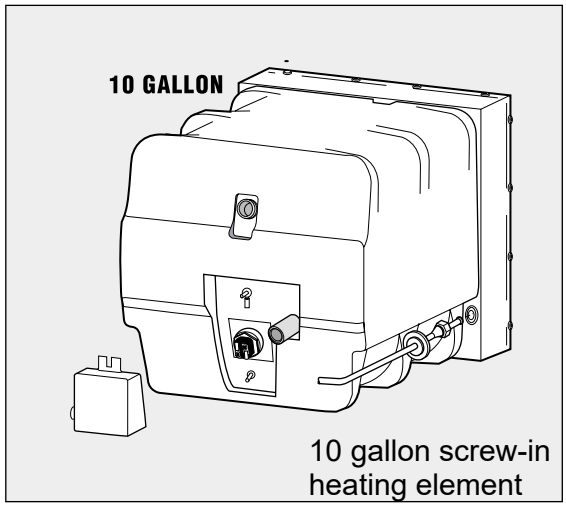

10 gallon screw-in heating element

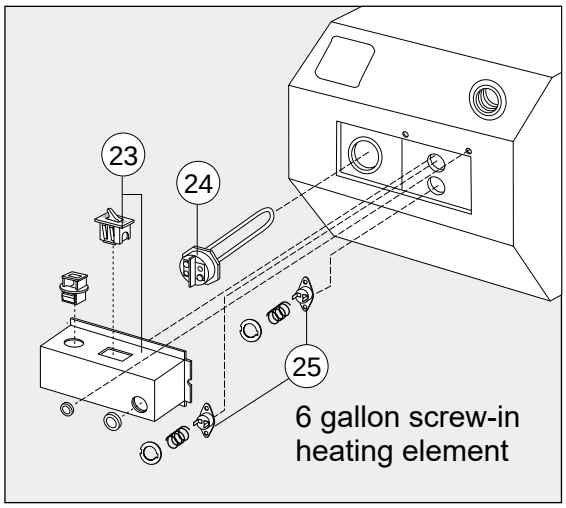

6 gallon screw-in heating element

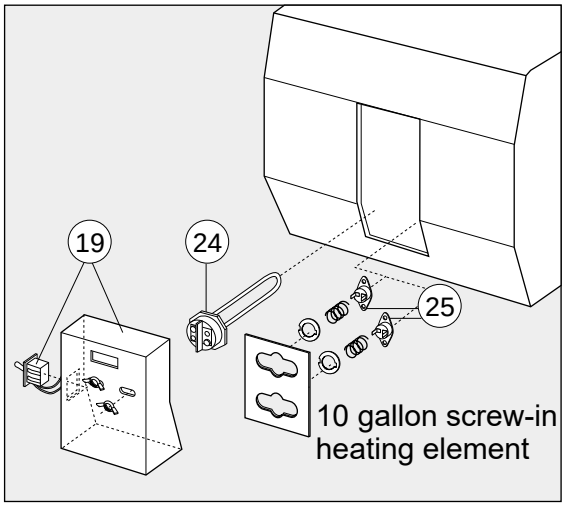

10 gallon screw-in heating element

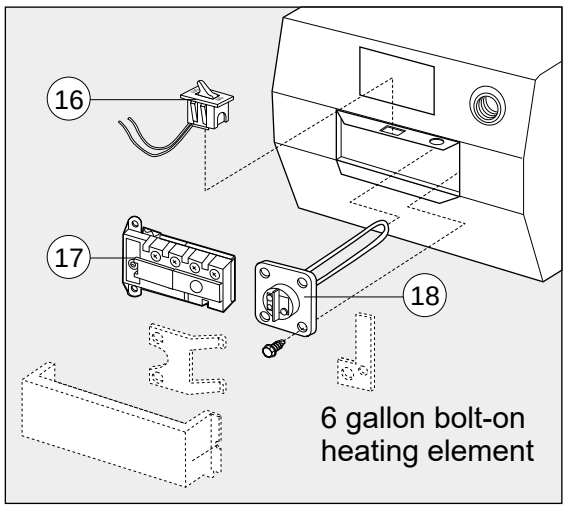

6 gallon bolt-on heating element

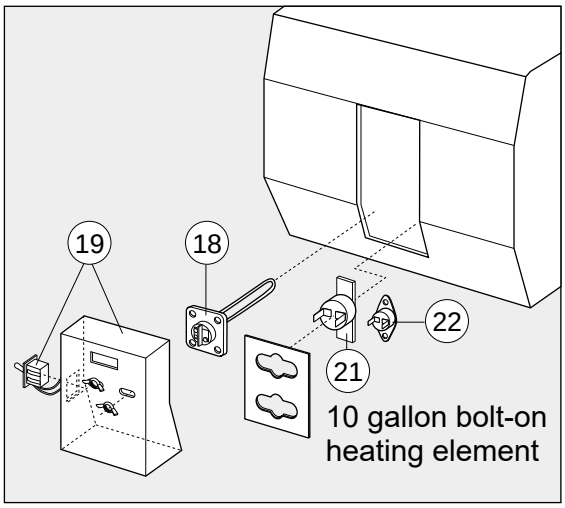

10 gallon bolt-on heating element

ELECTRONIC Water Heater
6 - 10 gallon

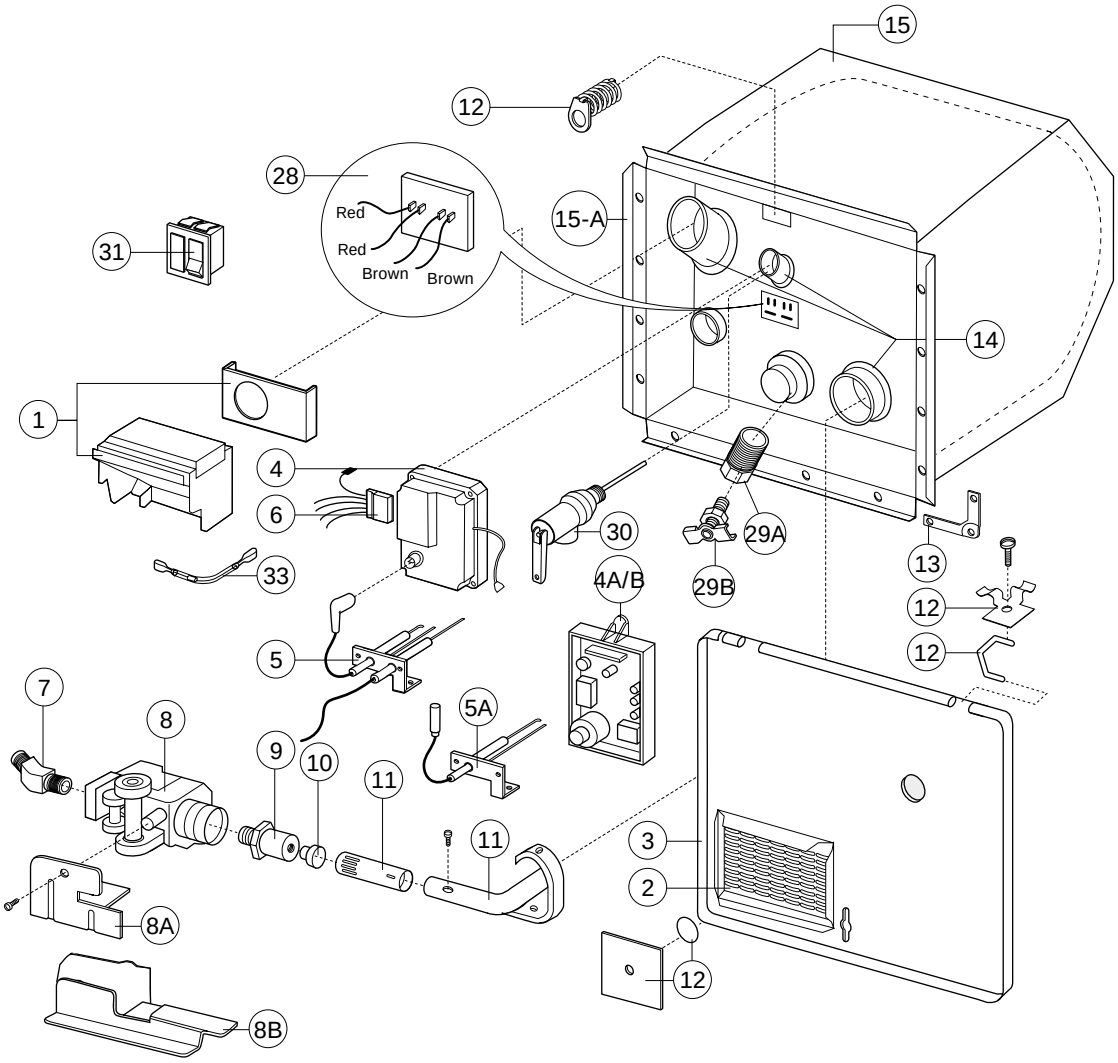

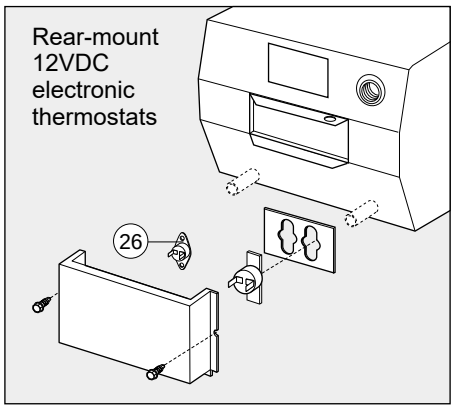

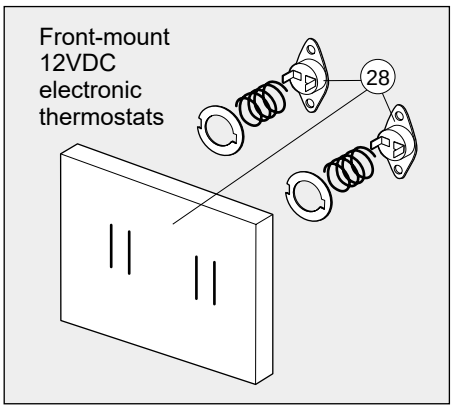

First number in matrix refers to illustration number, the second is the part number.

Electronic Water Heaters

REPLACEMENT PART REFERENCE
September 2003

			GCH6-4E, GCH6-6E, GCH6-7E, GC6A-7E	GH6-6E, GH6-7E, GH6-8E	G6A-6E, G6A-7E, G6A-8E	GCH6A-7E, GCH6A-8E, GCH6A-9E	GC6AA-7E, GC6AA-8E, GC6AA-9E	GCH10A-2E, GCH10A-3E, GC10A-2E, GC10A-3E	G10-1E, GH10-1E	G610-3E, GH610-3E	G10-2E G10-3E	GC10-1E, GC10-2E	GH10-2E, GH10-3E	G6A-2E, GH6-3E	G6A-3E, GH6-3E. GH6-4E, G6A-4E	GCH6A-10E, GC6AA-10E	GC10A-4E, GCH10A-4E
	91470	130° Front Mount thermostat (not shown)		×	×	×	×	×	×	×	×	×	×	×	×	×	×
	93105	Adjustable Thermostat (retrofits front-mount thermostats) (not shown)	×	×	×	×	×	×	×	×	×	×	×			×	×
	92610	Gas Line Grommet (not shown)	×	×	×	×	×	×	×	×	×	×	×			×	×
1	**90960**	Flue Box and Gasket	×	×	×	×	×	×	×	×	×	×	×	×	×	×	×
2	**92640**	Grille, New Style in Door	×	×	×	×	×	×	×		×	×	×			×	×
3	**91514**	Access Door (6 Gal.) Colonial White	×	×	×	×	×							×		×	
3	**93993**	Access Door (10 Gal.)						×	×	×	×	×	×				×
4	**91420**	Potted Circuit Board (post electrode connection)	***No Longer Available (Use 91504)***														
4A	**93865**	Potted Circuit Board (Spade Electrode Connection	×	×	×	×	×	×	×	×	×	×	×	×	×		
4B	**93851**	Potted Circuit Board - Combo														×	×
5	**91606**	Electrode (Remote Sense)	***No Longer Available (Use 91504)***														
5A	**93868**	Electrode (Local Sense)	×	×	×	×	×	×	×	×	×	×	×	×	×	×	×
6	**93919**	Wiring Harness	***No Longer Available (Use 93189)***														
6	**93189**	Wiring Harness	×	×	×	×	×	×	×	×	×	×	×	×	×		
6	**93191**	Wiring Harness Combo														×	×
7	**91044**	45° Elbow 3/8"	×	×	×	×	×	×	×	×	×	×	×	×	×	×	×
8	**93870**	White Rodger Valve (6 & 10 Gal.)	×	×	×	×	×	×	×	×	×	×	×	×	×	×	×
8A	**93243**	Gas Valve Bracket - (6 Gal.) (Use with 93870)	×	×	×	×	×							×	×	×	
	93862	Gas Valve Bracket - (10 Gal.) (Use with 93870)									×	×	×	×	×		×
8B	**94787**	Gas Valve Bracket - 1 piece				×	×	×			×		×	×		×	×
9	**91563**	Orifice Holder	×	×	×	×	×	×	×	×	×	×	×	×	×	×	×
10	**92742**	Main Burner Orifice 6 Gallon	×	×	×	×	×									×	
10	**93914**	Main Burner Orifice 10 Gallon						×	×	×	×	×					×
11	**91638**	Main Burner 6 Gallon	×	×	×	×	×									×	
11	**92615**	Main Burner 6 Gallon										×	×				
11	**96206**	Main Burner 10 Gallon					×	×		×	×		×				×
12	**91858**	Door Hardware Kit	×	×	×	×	×	×	×	×	×	×	×	×	×	×	×
13	**91928**	Set of 4 Corner Brackets	×	×	×	×	×	×	×	×	×	×	×	×	×	×	×
14	**96010**	Ring & Gasket Kit for service tank	×	×	×	×	×	×	×		×	×	×	×	×	×	×
15	**92220**	Styrofoam tank cover - bottom	×	×	×	×	×									×	
	92221	Styrofoam tank cover - top	×	×	×	×	×									×	
	91238	Styrofoam tank cover - bottom						×	×	×	×	×	×	×			×
	91239	Styrofoam tank cover - top						×	×	×	×	×	×	×			×

Electronic Water Heaters

REPLACEMENT PART REFERENCE
September 2003

			GCH6-4E, GCH6-6E, GCH6-7E, GC6A-7E	GH6-6E, GH6-7E, GH6-8E	G6A-6E, G6A-7E, G6A-8E	GCH6A-7E, GCH6A-8E, GCH6A-9E	GC6AA-7E, GC6AA-8E, GC6AA-9E	GCH10A-2E, GCH10A-3E, GC10A-2E, GC10A-3E	G10-1E, GH10-1E	G610-3E, GH610-3E	G10-2E G10-3E	GC10-1E, GC10-2E	GH10-2E, GH10-3E	G6A-2E, GH6-3E	G6A-3E, GH6-3E. GH6-4E, G6A-4E	GCH6A-10E, GC6AA-10E	GC10A-4E, GCH10A-4E
15-A	**91802**	Drawn Pan (Electronic 6 Gallon)	×	×	×	×	×									×	
15-A	**93871**	Drawn Pan (Electronic 10 Gal.)					×	×	×	×	×	×				×	
16	**92857**	110VAC ON/OFF Switch (6 Gal.)	***No Longer Available (Use 91092 or 91116)***														
16	**92858**	110VAC On/Off Switch (10 Gal.)	***No Longer Available (Use 91089 or 91182)***														
16	**91092**	110VAC ON/OFF Switch (6 Gal.)	×			×	×										
16	**91089**	110VAC On/Off Switch (10 Gal.)					×	×			×						
17	**91853**	110 VAC Thermostat (Rectangular)	×					×			×						
18	**91580**	110 VAC Element (Bolt-on)	×								×						
19	**91182**	110VAC On/Off Switch & Jct Box						×					×				
21	**92942**	110VAC E.C.O.										×					
22	**92943**	110VAC 140° Thermostat										×					
23	**91116**	110VAC On/Off Switch & Jct Box				×	×										
24	**92249**	110VAC Elmnt/Gskt (screw-in) Kit	×		×	×	×								×	×	
25	**91873**	Thermostat/E.C.O. 110 VAC	×			×	×	×									
28	**91447**	Front Mount E.C.O./thermostat	×	×	×	×	×	×	×	×	×	×	×		×	×	×
29A	**91857**	Drain Plug Kit 1/2"	×	×	×	×	×	×	×	×		×	×	×	×	×	×
29B	**92698**	Petcock Drain Valve 1/2"									×						
30	**91604**	Pressure Temperature Relief Valve	×	×	×	×	×	×	×	×	×	×	×	×	×	×	×
31	**91859**	Switch 12 VDC-White	×	×	×	×	×	×	×		×	×	×	×	×		
31	**91959**	Switch 12 VDC-Black	×	×	×	×	×	×	×		×	×	×	×	×		
31	**91230**	Switch 12 VDC-White Combo														×	×
33	**93866**	Thermal Cut-off	×	×	×	×	×	×	×	×	×	×	×	×	×	×	×
N/S	**90145**	Fuse, Mini 2AMP	×	×	×	×	×	×			×	×	×			×	×
N/S	**93849**	Relay														×	×
N/S	**91222**	Junction Box 110V														×	
N/S	**91224**	Junction Box 110V															×

SERVICE TANK KIT PART NUMBERS

REPLACEMENT PART REFERENCE
September 2003

MODELS	91411	91412	91591	91592	91593	91596	91641	91642	93950	93952	93953	94205	91059	91053	91060	91028
GAS																
G6A-2, G6A-3, G6A-6, G6A-7		●														
G10-1, G10-2												●				
GAS PILOT-RELIGHT																
G6A-6P, G6A-7P		●														
GC6AA-7P, GC6AA-8P			●													
GAS/PILOT RELIGHT COMBINATION																
GC10-2P						●										
G10-1P, G10-2P												●				
GC10A-2P, GC10A-3P						●										
GAS & ELECTRONIC IGNITION																
GH10-1E, GH10-2E, GH10-3E										●						
G10-1E, G10-2E, G10-3E									●							
G6A-4E, G6A-6E, G6A-7E, G6A-8E							●									
GH6-4E, GH6-6E, GH6-7E, GH6-8E								●								
GAS/ELECTRIC & ELECTRONIC IGNITION																
GCH6-4E, GCH6-6E, GCH6-7E				●												
GC6A-7E					●											
GCH10A-4E																●
GCH10A-1E, GCH10A-2E, GCH10A-3E											●					
GC10A-4E															●	
GC10A-1E. GC10A-2E, GC10A-3E											●					
GC10-1E, GC10-2E											●					
GCH10-2E											●					
GAS/ELECTRIC COMBINATION																
GC6A-3, GC6A-6, GC6A-7, GC6AA-7, GC6AA-8		●														
GCH6A-7E, GCH6A-8E, GCH6A-9E				●												
GCH6A-10E														●		
GC6AA-7E, GC6AA-8E, GC6AA-9E					●											
GC6AA-10E													●			
GC10-1, GC10-2						●										
GC10A-2, GC10A-3						●										
HEAT EXCHANGE																
GH6-3, GH6-6, GH6-7	●															

INNER TANK INCLUDES THE FOLLOWING:

- All tanks include the insulation jacket, rings and gaskets.
- On all combination gas/110VAC tanks, in addition to the items mentioned above, they will also come equipped with the 110VAC heating components attached (junction box, thermostat, ECO and heating element).

EHM 4-SM
EHM 6-SM
EHM 11-SM
EHM 20

ELECTRIC WATER HEATER

ALL MARINE WATER HEATER CAPACITIES

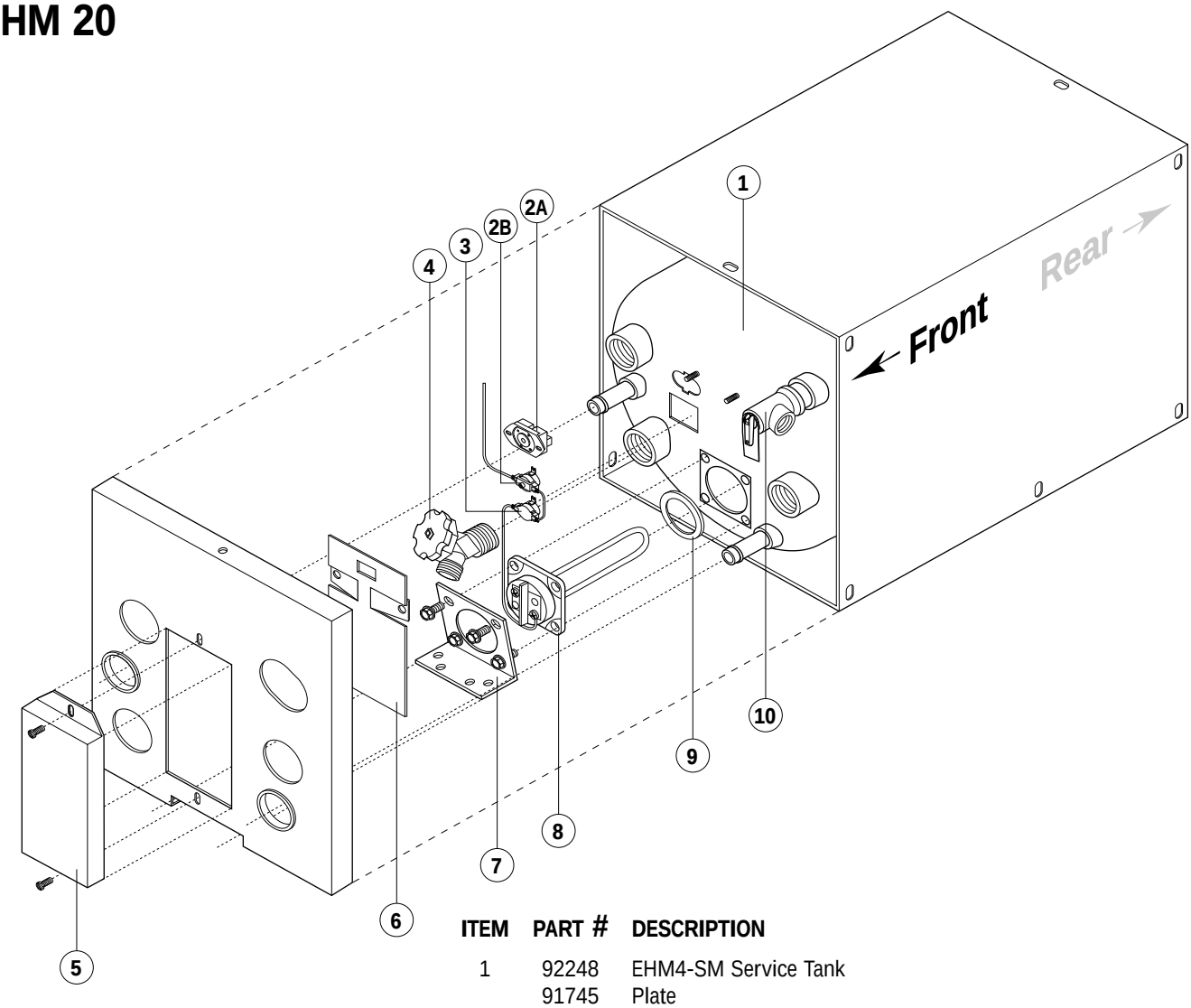

ITEM	PART #	STATUS	DESCRIPTION
1	91585	NLA	EHM6 Service Tank
1	91586	NLA	EHM6 FHX Tank
1	93291	NLA	EHM11 Service Tank\
1	93873	NLA	EHM11 FHX Tank

NLA - MUST BUY NEW UNIT

ITEM	PART #	DESCRIPTION
1	92248	EHM4-SM Service Tank
	91745	Plate
2A	91740	ECO Switch (220V)
2B/3	90037	Thermostat, ECO, plate, wires (110V)
2C	92942	High Limit
3	92943	Thermostat (140°)
2/3	90037	Thermostat/ECO Kit
4	91874	Drain Valve 3/4″
5	90045	Access Cover (NEW STYLE)
6	92236	Insulator
7	91479	Front & Rear Hold Down Bracket (4 & 6 gal)
	91489	Front & Rear Hold Down Bracket (11& 20 gal)
8	91580	Heating Element (110V) and gasket
	91851	Heating Element (220V) and gasket
9	92679	Gasket Heating Element (110V)
	91098	Gasket Heating Element (220V)
10	91604	Relief Valve (50 psi)
	92655	Relief Valve (75 psi)
N/S	91459	Thermostat for Solenoid Valve (EHP10)
N/S	91782	Solenoid Valve (EHP10)
N/S	91781	Water Valves (EHP10)

This manual has been provided courtesy of My RV Works, Inc.

www.myrvworks.com

You can find more RV service manuals here:

www.myrvworks.com/manuals

Over the years of running a mobile RV repair service, having a dedicated place to access service manuals for all the different appliances and components found on RVs was something that I always had a desire to create.

I hope this resource makes your RV repairs easier, as it has mine, but please be careful and follow proper safety practices when attempting to repair your own RV.

If in doubt, please consult with a professional RV technician!

DARREN KOEPP - OWNER, MY RV WORKS, INC.

All service manuals provided on www.myrvworks.com are believed to be released for distribution and/or in the public domain.